PT OF SW1/4
IN OR 1911/1395
EX S-1 & S-3 OF LOTS 7 & 8

HARRIS SHERRI SIKES
2496 SIKES DRIVE
HILLIARD, FL 32046

2026

10-2N-23-0000-0016-0000

BUILDING CHARACTERISTICS

ELEMENT	CD	CONSTRUCTION
Exterior Wall	19	COMMON BRK 100
Roof Structur	03	GABLE/HIP 100
Roof Cover	03	COMP SHNGL 100
Interior Wall	05	DRYWALL 100
Interior Floo	14	CARPET 100
Air Condition	03	CENTRAL 100
Heating Type	04	AIR DUCTED 100
Bedrooms		3 100
Bathrooms		2.5 100
Frame	02	WOOD FRAME 100
Stories	1.	1. 100
Units		0 100
BUD8 Adjustme	06	DIST 1D 100
Occupancy	00	NONE 100
Quality	03	Quality Level 03

DOR CODE	0100	SINGLE FAMILY	
MAP NUM		MKT AREA	09
NEIGHBORHOOD/LOC	9001.00		

AREA TYPE	TOTAL GROSS AREA	PCT OF BASE	YEAR	TOT ADJ AREA	SUBAREA MARKET VALUE
BAS	1,860	100	1993	1,860	155,762
FEP	180	80	1993	144	12,059
FEP	200	80	1993	160	13,399
FGR	360	55	1993	198	16,581
UDG	600	55	1993	330	27,635
TOTALS	3,200			2,692	225,437

MARKET ADJUSTMENTS

TYPE	MDL	EFF. AREA	TOT ADJ PTS	EFF. BASE RATE	REPL. COST NEW	AYB	EYB	ECON	FNCT		NORM	% COND
0100	01	2,692	119.0400	124.99	336,473	1974	1979	0	0	0	33.00	67.00

1 SINGLE FAM 0% - 0 Heated Area: 1860 HX Base Yr

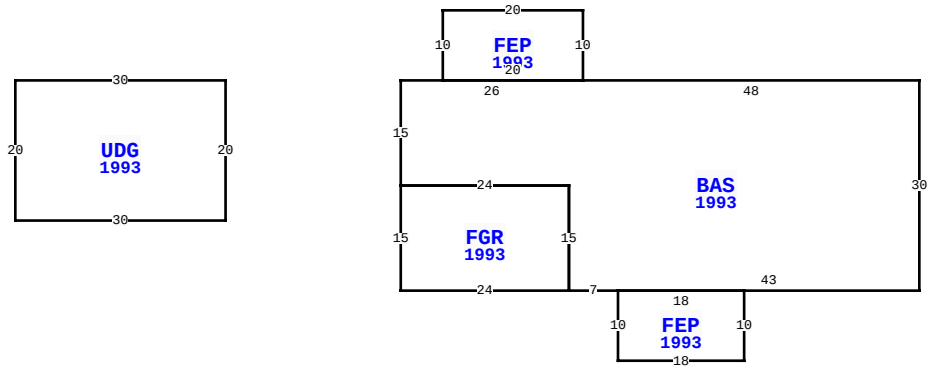

2897 SIKES DR, HILLIARD

BLD DATE		LGL DATE	
XF DATE		LAND DATE	05/12/2026 MLU
INC DATE		AG DATE	

NASSAU COUNTY PROPERTY

PAGE 1 of 1 6

VALUATION SUMMARY

VALUATION BY	STANDARD
Tax Group: 6	Tax Dist:
BUILDING MARKET VALUE	225,437
TOTAL MARKET OB/XF VALUE	0
TOTAL LAND VALUE - MARKET	62,000
TOTAL MARKET VALUE	287,437
SOH/AGL Deduction	0
ASSESSED VALUE	287,437
TOTAL EXEMPTION VALUE	0
BASE TAXABLE VALUE	287,437
TOTAL JUST VALUE	287,437
NCON VALUE	0
INCOME VALUE	
PREVIOUS YEAR MKT VALUE	288,010

PERMIT NUM	DESCRIPTION	AMT	ISSUED
1702907	REPAIR/RRF	12,280	05/08/2017

SALES DATA

OFF RECORD Number	DATE	TYPE INST	Q / U	V / I	RSN CD	SALE PRICE
1911/1395	3/28/2014	QC	U	I	11	100
GRANTOR: HARRIS SHERRI SIKES						
GRANTEE: HARRIS ALEXANDER CL						
1487/0870	3/23/2007	QC	Q	I	01	100
GRANTOR: SIKES RUBY L						
GRANTEE: HARRIS SHERRI SIKES						

BUILDING NOTES

BUILDING DIMENSIONS

BAS=[YR=1993] W48 FEP=[YR=1993] N10 W20 S10 E20$ W26 S15
FGR=[YR=1993] S15 E24 N15W24$ E24 S15 E7 FEP=[YR=1993] S10
E18 N10W18$ E43 N30$ PTR=W99 UDG=[YR=1993] W30 S20
E30N20$E99$.

EXTRA FEATURES

LN	OB/XF CODE	DESCRIPTION	BLD	CAP	L	W	UNITS	UT	Adj R	ADJ UNIT PRICE	ORIG COND	YEAR ON	YEAR ACTUAL	Q	% COND	OB/XF MKT VALUE	NOTES

LAND DESCRIPTION

TOTAL OB/XF 0

LN	USE CODE	CLS	LAND USE DESCRIPTION	CAP	RD	LOC ZONE	FRONT	DEPTH	TOT LND UTS	UNIT TYPE	DT	DPTH FACT	% COND	TOT ADJ	UNIT PRICE	ADJ UNIT PRICE	LAND VALUE	OTHER ADJUSTMENTS AND NOTES	YEAR	DENSITY	DECL	FRZ	YR	CONSRV
1	000100	C	RES	0	0005	OR	0.00	0.00	1.55	AC		1.00	1.00	1.00	40,000.00	40,000.00	62,000							

REVIEW DATE 03/05/2024 BY WWA Total Acres: 1.55 Total Land Value: 62,000 Market: 0 Agricultural: 0 Common: 62,000 PRINTED 07/09/2026 BY SYS