LOT 85
NASSAU STATION OR 2425/1321

75510 HARVESTER STREET TRUST/HARVESTER HOMES LLC T
8288 ROARING SPRINGS RD
GLOUCHESTER, VA 23061

2026

08-2N-27-0215-0085-0000

BUILDING CHARACTERISTICS

ELEMENT	CD	CONSTRUCTION
Exterior Wall	31	HARDIE BRD 100
Roof Structur	03	GABLE/HIP 100
Roof Cover	03	COMP SHNGL 100
Interior Wall	05	DRYWALL 100
Interior Floo	14	CARPET 60
Interior Floo	11	CLAY TILE 40
Air Condition	03	CENTRAL 100
Heating Type	04	AIR DUCTED 100
Bedrooms		3 100
Bathrooms		2.5 100
Frame	02	WOOD FRAME 100
Stories	2.	2. 100
Units		0 100
Occupancy	00	NONE 100
Quality	01	Quality Level 01
DOR CODE	0100	SINGLE FAMILY
MAP NUM		MKT AREA 04
NEIGHBORHOOD/LOC	4093.00	

AREA TYPE	TOTAL GROSS AREA	PCT OF BASE	YEAR	TOT ADJ AREA	SUBAREA MARKET VALUE
BAS	532	100	2021	532	59,702
FGR	280	55	2021	154	17,282
FOP	36	30	2021	11	1,234
FOP	72	30	2021	22	2,468
FUS	800	100	2021	800	89,777
STR	48	10	2021	5	561
TOTALS	1,768			1,524	171,025

MARKET ADJUSTMENTS

TYPE	MDL	EFF. AREA	TOT ADJ PTS	EFF. BASE RATE	REPL. COST NEW	AYB	EYB	ECON	FNCT		NORM	% COND
0320	01	1,524	108.5076	113.93	173,629	2021	2021	0	0	0	1.50	98.50

1 TOWNHOUSE 100% - 2022 Heated Area: 1332 HX Base Yr 2022

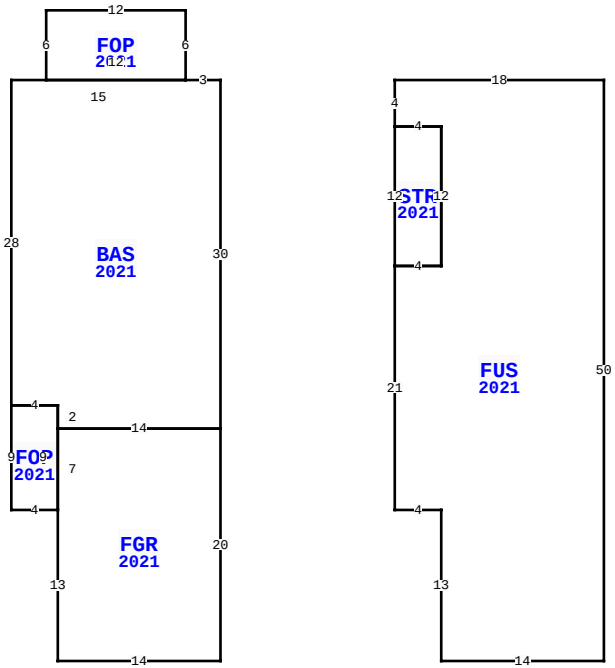

75510 HARVESTER ST, YULEE

BLD DATE		LGL DATE	
XF DATE		LAND DATE	04/09/2026 MLU
INC DATE		AG DATE	

NASSAU COUNTY PROPERTY

PAGE 1 of 1 4

VALUATION SUMMARY

VALUATION BY		STANDARD
Tax Group: 4	Tax Dist:	
BUILDING MARKET VALUE		171,025
TOTAL MARKET OB/XF VALUE		0
TOTAL LAND VALUE - MARKET		40,000
TOTAL MARKET VALUE		211,025
SOH/AGL Deduction		0
ASSESSED VALUE		211,025
TOTAL EXEMPTION VALUE	HX HB	51,411
BASE TAXABLE VALUE		159,614
TOTAL JUST VALUE		211,025
NCON VALUE		0
INCOME VALUE		
PREVIOUS YEAR MKT VALUE		228,489

PERMIT NUM	DESCRIPTION	AMT	ISSUED
210000	NEW CONSTR	180,000	03/01/2021

SALES DATA

OFF RECORD Number	DATE	TYPE INST	Q U	V I	RSN CD	SALE PRICE
2652/1714	5/19/2023	QC	U	I	11	100
GRANTOR: HYDRUSKO MATTHEW T &						
GRANTEE: 75510 HARVESTER STR						
2523/1519	12/21/2021	SW	Q	I	01	252,000
GRANTOR: D R HORTON INC-JACKSO						
GRANTEE: HYDRUSKO MATTHEW TH						

BUILDING NOTES

BUILDING DIMENSIONS

BAS=[YR=2021] W3 FOP=[YR=2021] N6 W12 S6 E12$ W15 S28
FOP=[YR=2021] S9 E4 FGR=[YR=2021] S13 E14 N20 W14 S7$ N9 W4$
E4 S2 E14 N30$ PTR=E15 FUS=[YR=2021] E18 S50 W14 N13 W4 N21
STR2 021=N12 E4 S12 W4$ E4 N12 W4 N4$ W15$.

EXTRA FEATURES

LN	OB/XF CODE	DESCRIPTION	BLD	CAP	L	W	UNITS	UT	Adj R	ADJ UNIT PRICE	ORIG COND	YEAR ON	YEAR ACTUAL	Q	% COND	OB/XF MKT VALUE	NOTES

LAND DESCRIPTION

TOTAL OB/XF 0

LN	USE CODE	CLS	LAND USE DESCRIPTION	CAP	RD	LOC ZONE	FRONT	DEPTH	TOT LND UTS	UNIT TYPE	DT	DPTH FACT	% COND	TOT ADJ	UNIT PRICE	ADJ UNIT PRICE	LAND VALUE	OTHER ADJUSTMENTS AND NOTES	YEAR	DENSITY	DECL	FRZ	YR	CONSRV
1	000310	C	TOWNHOUSE	100	0003	PUD	0.00	0.00	1.00	LT		1.00	1.00	1.00	40,000.00	40,000.00	40,000							

REVIEW DATE 01/01/2023 BY CD Total Acres: 0.00 Total Land Value: 40,000 Market: 0 Agricultural: 0 Common: 40,000 PRINTED 07/09/2026 BY SYS