LOT 52
CORNWALL SURVEY

BLACKALL JEFFREY ANDREW
27234 GEORGIA STREET
HILLIARD, FL 32046

2026

07-3N-24-2020-0052-0000

BUILDING CHARACTERISTICS

ELEMENT	CD	CONSTRUCTION
Exterior Wall	19	COMMON BRK 100
Roof Structur	03	GABLE/HIP 100
Roof Cover	03	COMP SHNGL 100
Interior Wall	05	DRYWALL 100
Interior Floo	13	LVT/LAMNT 60
Interior Floo	11	CLAY TILE 40
Air Condition	03	CENTRAL 100
Heating Type	04	AIR DUCTED 100
Bedrooms		3 100
Bathrooms		2.5 100
Frame	02	WOOD FRAME 100
Stories	1.	1. 100
Units		0 100
BUD8 Adjustme	04	DIST 01 100
Occupancy	00	NONE 100
Quality	01	Quality Level 01

DOR CODE	0100	SINGLE FAMILY	
MAP NUM		MKT AREA	09
NEIGHBORHOOD/LOC	9001.00		

AREA TYPE	TOTAL GROSS AREA	PCT OF BASE	YEAR	TOT ADJ AREA	SUBAREA MARKET VALUE
BAS	1,908	100	1993	1,908	181,851
BAS	144	100	2004	144	13,725
BAS	500	100	2004	500	47,655
DCK	360	10	2004	36	3,431
FOP	90	30	1993	27	2,573
UDG	900	55	1993	495	47,178
TOTALS	3,902			3,110	296,412

MARKET ADJUSTMENTS

TYPE	MDL	EFF. AREA	TOT ADJ PTS	EFF. BASE RATE	REPL. COST NEW	AYB	EYB	ECON	FNCT		NORM	% COND
0900	01	3,110	105.4872	146.63	456,019	1975	1975	0	0	0	35.00	65.00

1 SNGL FAM 0% - 2026 Heated Area: 2552 HX Base Yr

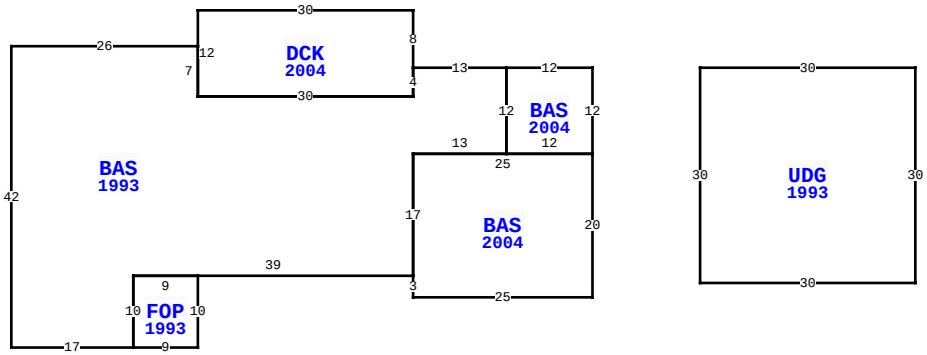

27234 GEORGIA ST, HILLIARD

BLD DATE		LGL DATE	
XF DATE		LAND DATE	05/12/2026 MLU
INC DATE		AG DATE	01/17/2025 KBA

NASSAU COUNTY PROPERTY

PAGE 1 of 1 4

VALUATION SUMMARY

VALUATION BY	STANDARD
Tax Group: 4	Tax Dist:
BUILDING MARKET VALUE	296,412
TOTAL MARKET OB/XF VALUE	3,374
TOTAL LAND VALUE - MARKET	190,000
TOTAL MARKET VALUE	489,786
SOH/AGL Deduction	0
ASSESSED VALUE	489,786
TOTAL EXEMPTION VALUE	0
BASE TAXABLE VALUE	489,786
TOTAL JUST VALUE	489,786
NCON VALUE	0
INCOME VALUE	
PREVIOUS YEAR MKT VALUE	477,635

PERMIT NUM	DESCRIPTION	AMT	ISSUED

SALES DATA

OFF RECORD Number	DATE	TYPE INST	Q U /	V I /	RSN CD	SALE PRICE
2834/550	11/25/2025	WD	Q	I	01	613,000
GRANTOR: FREDERICK SUE V						
GRANTEE: BLACKALL JEFFREY AN						
0107/0712	1/01/1970	TA	Q	V		3,000
GRANTOR:						
GRANTEE:						

BUILDING NOTES

BUILDING DIMENSIONS

BAS=[YR=2004] W12 BAS=[YR=1993] W13 DCK=[YR=2004] N8 W30 S12 E30 N4 $ S4 W30 N7 W26 S42 E17 FOP=[YR=1993] E9 N10 W9 S10 $ N10 E39 BAS=[YR=2004] S3 E25 N20 W25 S17 $ N17 E13 N12 $ S12 E12 N12 $ PTR= E15 UDG=[YR=1993] E30 S30 W30 N30 $ W15 $.

EXTRA FEATURES

LN	OB/XF CODE	DESCRIPTION	BLD	CAP	L	W	UNITS	UT	Adj R	ADJ UNIT PRICE	ORIG COND	YEAR ON	YEAR ACTUAL	Q	% COND	OB/XF MKT VALUE	NOTES
1	0500	FP-PRE FAB	0	0	0	0	1.00	UT	3,500.00	3,500.00	100	1975	1975	3	32	1,120	
4	0912	SCRN RM G	0	0	21	21	441.00	SF	21.00	21.00	100	1992	1992	3	20	1,852	
5	0940	SHEDS/PORT	0	0	10	10	100.00	SF	20.10	20.10	100	1997	1997	3	20	402	

LAND DESCRIPTION

TOTAL OB/XF 3,374

LN	USE CODE	CLS	LAND USE DESCRIPTION	CAP	RD	LOC ZONE	FRONT	DEPTH	TOT LND UTS	UNIT TYPE	DT	DPTH FACT	% COND	TOT ADJ	UNIT PRICE	ADJ UNIT PRICE	LAND VALUE	OTHER ADJUSTMENTS AND NOTES	YEAR	DENSITY	DECL	FRZ	YR	CONSRV
1	000100	C	RES	0		OR	0.00	0.00	10.00	AC		1.00	1.00	1.00	19,000.00	19,000.00	190,000							

REVIEW DATE 01/01/2023 BY CD Total Acres: 10.00 Total Land Value: 190,000 Market: 0 Agricultural: 0 Common: 190,000 PRINTED 07/09/2026 BY SYS