LOT 14 (EX S-1 & S-3)
PT OR 1227/677
F/K/A 05-4N-24-0000-0010-0010

PIKE THOMAS B SR & SHARON E
39602 PROSPECT LANDING ROAD
HILLIARD, FL 32046-5729

2026

05-4N-24-1630-0014-0000

NASSAU COUNTY PROPERTY

BUILDING CHARACTERISTICS

ELEMENT	CD	CONSTRUCTION
Exterior Wall	20	FACE BRICK 90
Exterior Wall	05	AVERAGE 10
Roof Structur	03	GABLE/HIP 100
Roof Cover	03	COMP SHNGL 100
Interior Wall	05	DRYWALL 100
Interior Floo	12	HARDWOOD 50
Interior Floo	14	CARPET 50
Air Condition	03	CENTRAL 100
Heating Type	04	AIR DUCTED 100
Bedrooms		3 100
Bathrooms		2.5 100
Frame	02	WOOD FRAME 100
Stories	1.	1. 100
Units		0 100
Occupancy	00	NONE 100
Quality	04	Quality Level 04
DOR CODE	5000	IMPROVED AG
MAP NUM		MKT AREA 09
NEIGHBORHOOD/LOC	9001.00	

AREA TYPE	TOTAL GROSS AREA	PCT OF BASE	YEAR	TOT ADJ AREA	SUBAREA MARKET VALUE
BAS	2,699	100	2005	2,699	323,723
FGR	550	55	2005	302	36,223
FOP	114	30	2005	34	4,078
FOP	282	30	2005	85	10,195
FST	20	55	2005	11	1,320
PTO	192	5	2005	10	1,200
STP	18	10	2005	2	240
UDG	1,575	55	2005	866	103,870
UOP	192	20	2010	38	4,558
TOTALS	5,642			4,047	485,405

MARKET ADJUSTMENTS

TYPE	MDL	EFF. AREA	TOT ADJ PTS	EFF. BASE RATE	REPL. COST NEW	AYB	EYB	ECON	FNCT		NORM	% COND
0900	01	4,047	100.9008	140.25	567,592	2005	2005	0	0	0	14.48	85.52

1 SNGL FAM 100% - 2006 Heated Area: 2699 HX Base Yr 2006

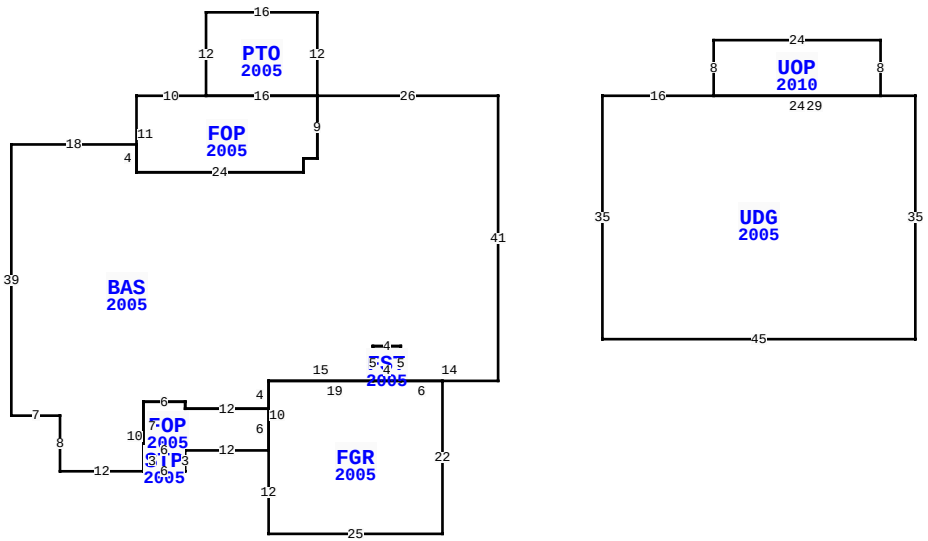

39602 PROSPECT LANDING RD, HILLIARD

BLD DATE		LGL DATE	
XF DATE		LAND DATE	05/12/2026 MLU
INC DATE		AG DATE	09/18/2025 KBA

VALUATION SUMMARY

VALUATION BY		STANDARD
Tax Group: 4	Tax Dist:	
BUILDING MARKET VALUE		485,405
TOTAL MARKET OB/XF VALUE		1,740
TOTAL LAND VALUE - MARKET		204,510
TOTAL MARKET VALUE		508,502
SOH/AGL Deduction		260,953
ASSESSED VALUE		247,549
TOTAL EXEMPTION VALUE	HX HB	51,411
BASE TAXABLE VALUE		196,138
TOTAL JUST VALUE		691,655
NCON VALUE		0
INCOME VALUE		
PREVIOUS YEAR MKT VALUE		698,128

PERMIT NUM	DESCRIPTION	AMT	ISSUED
M10417	MECH OTHER	0	10/01/2005
R07957	REPAIR/RRF	6,000	07/01/2005
M09346	MECH OTHER	0	02/01/2005
P0408854	OTHER	0	12/01/2004

SALES DATA

OFF RECORD Number	DATE	TYPE INST	Q U	V I	RSN CD	SALE PRICE
1227/0677	5/03/2004	WD	U	V	09	294,000
GRANTOR: FORBESS THOMAS JR & P						
GRANTEE: PIKE THOMAS B SR &						
0782/1895	1/22/1997	WD	U	I	09	175,000
GRANTOR: HARRIS MITCHELL						
GRANTEE: FORBESS THOMAS JR &						

BUILDING NOTES

BUILDING DIMENSIONS

BAS=[YR=2005] W26 PTO=[YR=2005] N12 W16 S12 FOP=[YR=2005] W10 S11 E24 N2 E2 N9 W16$ E16$S9 W2 S2 W24 N4 W18 S39 E7 S8 E12 STP=[YR=2005] E6 N3 FOP=[YR=2005] E12 FGR=[YR=2005] S12 E25 N22 W6 FST=[YR=2005] N5 W4 S5 E4 $ W19 S10 $ N6 W12 N1 W6 S7 E6$ W6 S3$ N10 E6 S1 E12 N4 E15 N5 E4 S5 E14 N41 $ PTR= E15 UDG=[YR=2005] E16 UOP=[YR=2010] N8 E24 S8 W24$ E29 S35 W45 N35 $ W15 $.

EXTRA FEATURES

LN	OB/XF CODE	DESCRIPTION	BLD	CAP	L	W	UNITS	UT	Adj R	ADJ UNIT PRICE	ORIG COND	YEAR ON	YEAR ACTUAL	Q	% COND	OB/XF MKT VALUE	NOTES
3	0504	FP-ELECTRI	0	100	0	0	1.00	UT	2,000.00	2,000.00	100	2005	2005	3	87	1,740	

LAND DESCRIPTION

TOTAL OB/XF 1,740

LN	USE CODE	CLS	LAND USE DESCRIPTION	CAP	RD	LOC ZONE	FRONT	DEPTH	TOT LND UTS	UNIT TYPE	DT	DPTH FACT	% COND	TOT ADJ	UNIT PRICE	ADJ UNIT PRICE	LAND VALUE	OTHER ADJUSTMENTS AND NOTES	YEAR	DENSITY	DECL	FRZ	YR	CONSRV
1	005000	C	AGRICULTURAL	100	0005	OR	0.00	0.00	1.00	AC		1.00	1.00	1.00	17,000.00	17,000.00	17,000							
2	005600	A	TIMBER 3 N S	0		OR	0.00	0.00	11.03	AC		1.00	1.00	1.00	395.00	395.00	4,357							
3	009910	M	MARKET VALUE	0		OR	0.00	0.00	11.03	AC		1.00	1.00	1.00	17,000.00	17,000.00	187,510							

REVIEW DATE 01/01/2023 BY CD Total Acres: 12.03 Total Land Value: 21,357 Market: 187,510 Agricultural: 4,357 Common: 17,000 PRINTED 07/09/2026 BY SYS