PT OF LOT 4 (S-1)
IN OR 1958/1973
PLEASANT PARK SUB PB 2/21

RADHERADHE LLC
552428 US HWY 1
HILLIARD, FL 32046

2026

05-3N-24-2360-0004-0010

NASSAU COUNTY PROPERTY

BUILDING CHARACTERISTICS

ELEMENT	CD	CONSTRUCTION
Exterior Wall	15	CONC BLOCK 90
Exterior Wall	18	CEMENT BRK 10
Roof Structur	04	WOOD TRUSS 100
Roof Cover	03	COMP SHNGL 100
Interior Wall	01	MINIMUM 50
Interior Wall	03	PLASTER 50
Interior Floo	11	CLAY TILE 50
Interior Floo	13	LVT/LAMNT 50
Ceiling	02	F.NOT SUS 100
Air Condition	02	WINDOW 100
Heating Type	02	CONVECTION 100
Fixtures		63 100
Frame	03	MASONRY 100
Story Height		8 100
RMS		20 100
Units		0 100
Occupancy	00	NONE 100
Quality	03	Quality Level 03
DOR CODE	3900	HOTELS AND MOTELS
MAP NUM		MKT AREA 09
NEIGHBORHOOD/LOC	9002.00	

AREA TYPE	TOTAL GROSS AREA	PCT OF BASE	YEAR	TOT ADJ AREA	SUBAREA MARKET VALUE
AOF	272	100	2006	272	4,947
APT	768	100	2006	768	13,968
BAS	1,104	100	1993	1,104	20,080
BAS	1,232	100	1993	1,232	22,408
BAS	1,424	100	1993	1,424	25,900
BAS	1,424	100	1993	1,424	25,900
FCP	208	20	1993	42	764
FOP	2,412	20	1993	482	8,767
FST	108	50	1993	54	982
FST	192	50	2006	96	1,746
TOTALS	9,488			7,054	128,298

MARKET ADJUSTMENTS

TYPE	MDL	EFF. AREA	TOT ADJ PTS	EFF. BASE RATE	REPL. COST NEW	AYB	EYB	ECON	FNCT		NORM	% COND
3901	07	7,054	95.7228	90.94	641,491	1960	1960	0	0	0	80.00	20.00

2 MOTEL 0% - 0 Heated Area: 6224 HX Base Yr

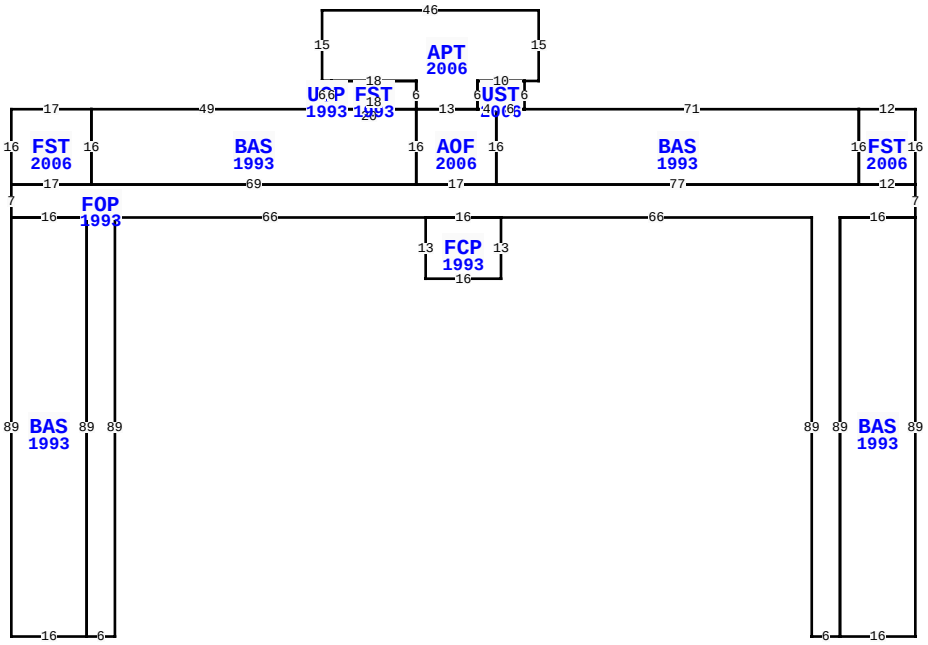

** This building has 13 Sub-Areas

552428 US HWY 1, HILLIARD

BLD DATE	12/27/2024	KW	LGL DATE		
XF DATE	12/27/2024	KW	LAND DATE	05/14/2026	DC
INC DATE	05/12/2026	DG	AG DATE		

VALUATION SUMMARY

VALUATION BY	DIRECT_CAP
Tax Group: 4	Tax Dist:
BUILDING MARKET VALUE	335,930
TOTAL MARKET OB/XF VALUE	0
TOTAL LAND VALUE - MARKET	0
TOTAL MARKET VALUE	335,930
SOH/AGL Deduction	121,648
ASSESSED VALUE	214,282
TOTAL EXEMPTION VALUE	0
BASE TAXABLE VALUE	214,282
TOTAL JUST VALUE	335,930
NCON VALUE	0
INCOME VALUE	335930
PREVIOUS YEAR MKT VALUE	218,842

THE ATTACHED BLDG (OLD DINER) @ 552430 IS ON PRCL
HOLIDAY TERRACE MOTEL (18 UNITS USED)

PERMIT NUM	DESCRIPTION	AMT	ISSUED
22013654	REPAIR/RRF	2,953	09/08/2022
21008524	ROOF	50,000	06/29/2021

SALES DATA

OFF RECORD Number	DATE	TYPE INST	Q / U	V / I	RSN CD	SALE PRICE
1958/1973	11/24/2014	SW	Q	I	01	200,000
GRANTOR: AUM SHIV LLC						
GRANTEE: RADHERADHE LLC						
1896/1978	1/01/2014	QC	U	I	11	100
GRANTOR: PATEL NARENDA & VARSH						
GRANTEE: AUM SHIV LLC						

BUILDING NOTES

EXTRA FEATURES

LN	OB/XF CODE	DESCRIPTION	BLD	CAP	L	W	UNITS	UT	Adj R	ADJ UNIT PRICE	ORIG COND	YEAR ON	YEAR ACTUAL	Q	% COND	OB/XF MKT VALUE	NOTES
1	0803	ASPHALT C	0	0	0	0	10,500.00	SF	2.00	2.00	100	2006	2006	3	54	11,340	
2	0810	CONCRETE A	0	0	0	0	392.00	SF	6.50	6.50	100	1985	1985	3	41	1,045	
3	0424	CL FNC 6'	0	0	0	0	165.00	LF	20.00	20.00	100	2006	2006	3	64	2,112	
4	0463	FENCE GATE	0	0	0	0	1.00	UT	300.00	300.00	100	2006	2006	3	64	192	
5	0971	ST LGHT OV	0	0	0	0	2.00	UT	1,555.00	1,555.00	100	1990	1990	3	26	809	
6	0940	SHEDS/PORT	0	0	12	10	120.00	SF	21.30	21.30	100	2008	2008	3	27	690	

BUILDING DIMENSIONS

FOP=[YR=1993;ORIG=-192,16] S7 E16 S89 E6 N89 E66 E16 E66 S89 E6 N89 E16 N7 W12 W77 W17 W69 W17 $
BAS=[YR=1993;LABEL=units: 1-5;ORIG=-192,23] S89 E16 N89 W16 $
BAS=[YR=1993;LABEL=units: 16-20;ORIG=-16,112] E16 N89 W16 S89 $
BAS=[YR=1993;LABEL=units: 11-14;ORIG=-12,0] W71 W6 S16 E77 N16 $
BAS=[YR=1993;LABEL=units: 6-10;ORIG=-126,0] W49 S16 E69 N16 W20 $
APT=[YR=2006;LABEL=owners aprtment;ORIG=-83,-6] E3 N15 W46 S15 E2 E18 S6 E13 N6 E10 $
FST=[YR=2006;ORIG=-175,0] W17 S16 E17 N16 $

LAND DESCRIPTION

TOTAL OB/XF 16,188

LN	USE CODE	CLS	LAND USE DESCRIPTION	CAP	RD	LOC ZONE	FRONT	DEPTH	TOT LND UTS	UNIT TYPE	DT	DPTH FACT	% COND	TOT ADJ	UNIT PRICE	ADJ UNIT PRICE	LAND VALUE	OTHER ADJUSTMENTS AND NOTES	YEAR	DENSITY	DECL	FRZ	YR	CONSRV
1	003900	C	MOTEL	0	0004	CI	0.00	0.00	61,855.00	SF		1.00	1.00	1.00	1.50	1.50	92,782							

REVIEW DATE 12/27/2024 BY KW Total Acres: 0.00 Total Land Value: 0 Market: 0 Agricultural: 0 Common: 0 PRINTED 07/09/2026 BY SYS