LOT 14 (EX S-1)
IN OR 690 PG 1226
CORNWALL SURVEY

CARROLL CHARLES R & TRACY LYNN
27167 BETINA DRIVE
HILLIARD, FL 32046

2026

05-3N-24-2020-0014-0000

BUILDING CHARACTERISTICS

ELEMENT	CD	CONSTRUCTION
Exterior Wall	20	FACE BRICK 90
Exterior Wall	12	CEDAR 10
Roof Structur	03	GABLE/HIP 100
Roof Cover	03	COMP SHNGL 100
Interior Wall	05	DRYWALL 100
Interior Floo	14	CARPET 80
Interior Floo	08	SHT VINYL 20
Air Condition	03	CENTRAL 100
Heating Type	04	AIR DUCTED 100
Bedrooms		3 100
Bathrooms		2 100
Frame	02	WOOD FRAME 100
Stories	1.	1. 100
Units		0 100
Occupancy	00	NONE 100
Quality	03	Quality Level 03

DOR CODE	0100	SINGLE FAMILY	
MAP NUM		MKT AREA	06
NEIGHBORHOOD/LOC	6001.00		

AREA TYPE	TOTAL GROSS AREA	PCT OF BASE	YEAR	TOT ADJ AREA	SUBAREA MARKET VALUE
BAS	1,767	100	1996	1,767	156,940
FOP	665	30	1996	200	17,764
UOP	600	20	2012	120	10,658
TOTALS	3,032			2,087	185,362

MARKET ADJUSTMENTS

TYPE	MDL	EFF. AREA	TOT ADJ PTS	EFF. BASE RATE	REPL. COST NEW	AYB	EYB	ECON	FNCT		NORM	% COND
0100	01	2,087	107.1140	112.47	234,725	1996	1996	0	0	0	21.03	78.97

1 SINGLE FAM 100% - 1997 Heated Area: 1767 HX Base Yr 1997

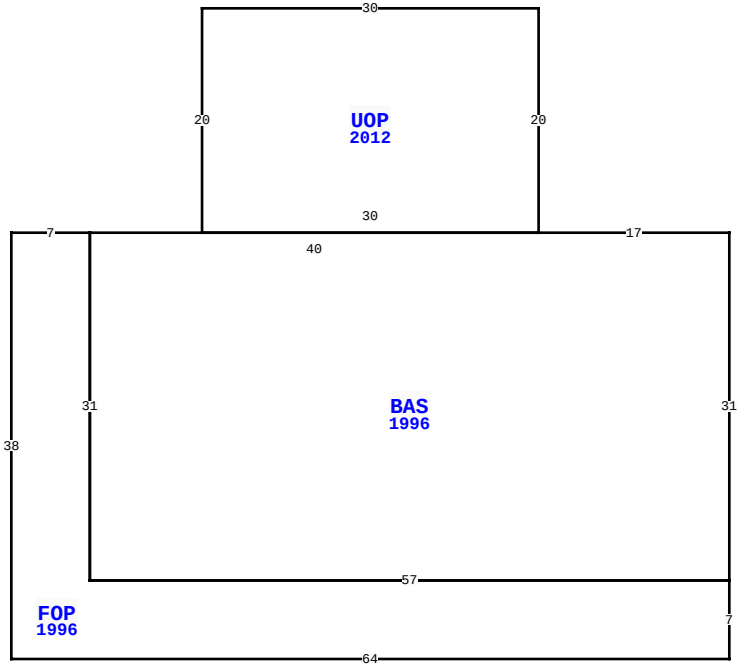

27167 BETINA DR, HILLIARD

BLD DATE		LGL DATE	
XF DATE		LAND DATE	05/11/2026 MLU
INC DATE		AG DATE	

NASSAU COUNTY PROPERTY

PAGE 1 of 2 3

VALUATION SUMMARY

VALUATION BY		STANDARD
Tax Group: 3	Tax Dist:	
BUILDING MARKET VALUE		257,147
TOTAL MARKET OB/XF VALUE		83,501
TOTAL LAND VALUE - MARKET		147,000
TOTAL MARKET VALUE		487,648
SOH/AGL Deduction		243,838
ASSESSED VALUE		243,810
TOTAL EXEMPTION VALUE	HX HB	51,411
BASE TAXABLE VALUE		192,399
TOTAL JUST VALUE		487,648
NCON VALUE		0
INCOME VALUE		
PREVIOUS YEAR MKT VALUE		462,493

PERMIT NUM	DESCRIPTION	AMT	ISSUED
9510138	NEW CONSTR	76,000	10/13/1995

SALES DATA

OFF RECORD Number	DATE	TYPE INST	Q U	V I	RSN CD	SALE PRICE
0690/1226	10/18/1993	WD	Q	V	01	100
GRANTOR: CARROLL CHARLES & T						
GRANTEE: CARROLL CHARLES & T						
0690/1225	10/18/1993	QC	U	V	07	100
GRANTOR: CREWS MARY M						
GRANTEE: CARROLL CHARLES R						

BUILDING NOTES

EXTRA FEATURES

LN	OB/XF CODE	DESCRIPTION	BLD	CAP	L	W	UNITS	UT	Adj R	ADJ UNIT PRICE	ORIG COND	YEAR ON	YEAR ACTUAL	Q	% COND	OB/XF MKT VALUE	NOTES
1	0500	FP-PRE FAB	0	100	0	0	1.00	UT	3,500.00	3,500.00	100	1996	1996	3	76	2,660	
2	0681	POLE SHED	0	100	16	30	480.00	SF	15.00	15.00	100	1995	1995	3	20	1,440	
4	0920	CWALL-WD/M	0	100	0	0	276.00	LF	390.00	390.00	100	2012	2012	3	45	48,438	
5	0300	BOAT DCK W	0	100	0	0	416.00	SF	40.00	40.00	100	2012	2012	3	60	9,984	
6	0350	CARPORT WD	0	100	14	10	140.00	SF	13.00	13.00	100	2012	2012	3	45	819	
7	0680	POLE SHED	0	100	48	50	2,400.00	SF	10.00	10.00	100	2020	2019	03	84	20,160	

BUILDING DIMENSIONS

BAS=[YR=1996] W17 UOP=[YR=2012] N20 W30 S20 E30$ W40
FOP=[YR=1996] W7 S38 E64N7 W57 N31$ S31 E57 N31$.

LAND DESCRIPTION

TOTAL OB/XF 83,501

LN	USE CODE	CLS	LAND USE DESCRIPTION	CAP	RD	LOC ZONE	FRONT	DEPTH	TOT LND UTS	UNIT TYPE	DT	DPTH FACT	% COND	TOT ADJ	UNIT PRICE	ADJ UNIT PRICE	LAND VALUE	OTHER ADJUSTMENTS AND NOTES	YEAR	DENSITY	DECL	FRZ	YR	CONSRV
1	000100	C	RES	100	0005	A-1	0.00	0.00	7.00	AC		1.00	1.00	1.00	21,000.00	21,000.00	147,000							

REVIEW DATE 01/01/2023 BY CD Total Acres: 7.00 Total Land Value: 147,000 Market: 0 Agricultural: 0 Common: 147,000 PRINTED 07/09/2026 BY SYS

LOT 14 (EX S-1)
IN OR 690 PG 1226
CORNWALL SURVEY

CARROLL CHARLES R & TRACY LYNN
27167 BETINA DRIVE
HILLIARD, FL 32046

2026

05-3N-24-2020-0014-0000

BUILDING CHARACTERISTICS

ELEMENT	CD	CONSTRUCTION
Exterior Wall	05	AVERAGE 100
Roof Structur	03	GABLE/HIP 100
Roof Cover	12	MODULAR MT 100
Interior Wall	07	NONE 100
Interior Floo	03	CONC FINSH 100
Air Condition	01	NONE 100
Heating Type	01	NONE 100
Bedrooms		0 100
Bathrooms		0 100
Frame	02	WOOD FRAME 100
Stories	0	0 100
Units		0 100
Occupancy	00	NONE 100
Quality	01	Quality Level 01

DOR CODE 0100 SINGLE FAMILY
MAP NUM | MKT AREA 06
NEIGHBORHOOD/LOC 6001.00

AREA TYPE	TOTAL GROSS AREA	PCT OF BASE	YEAR	TOT ADJ AREA	SUBAREA MARKET VALUE
BAS	720	100	2012	720	10,287
BAS	3,728	100	2012	3,728	53,267
UOP	480	20	2012	96	1,372
UUS	960	50	2012	480	6,859
TOTALS	5,888			5,024	71,785

MARKET ADJUSTMENTS

TYPE	MDL	EFF. AREA	TOT ADJ PTS	EFF. BASE RATE	REPL. COST NEW	AYB	EYB	ECON	FNCT		NORM	% COND
6500	01	5,024	43.6050	17.01	85,458	2012	2012	0	0	0	16.00	84.00

2 GARAGE RES 100% - 1997 Heated Area: 4448 HX Base Yr 1997

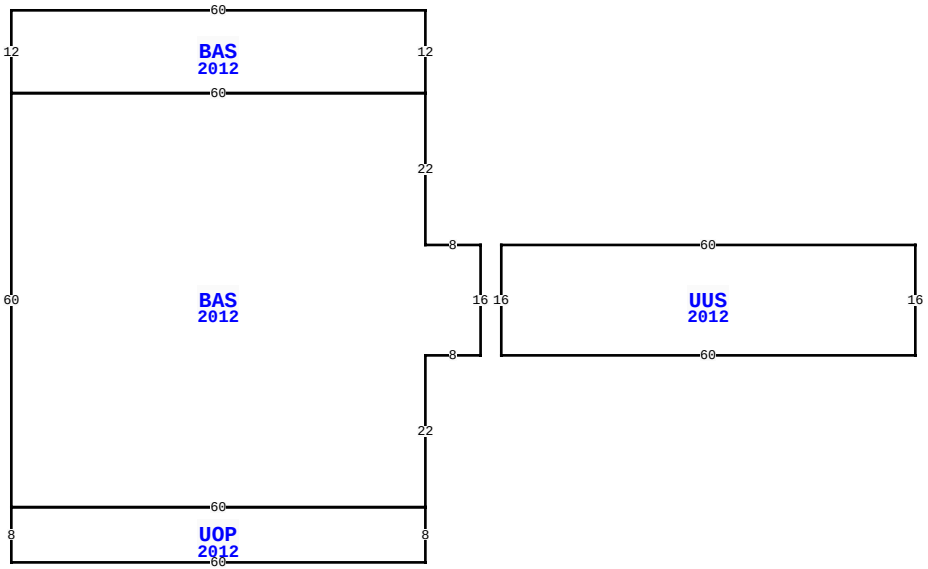

27167 BETINA DR, HILLIARD

BLD DATE		LGL DATE	
XF DATE		LAND DATE	05/11/2026 MLU
INC DATE		AG DATE	

NASSAU COUNTY PROPERTY

PAGE 2 of 2 3

VALUATION SUMMARY

VALUATION BY		STANDARD
Tax Group: 3	Tax Dist:	
BUILDING MARKET VALUE		257,147
TOTAL MARKET OB/XF VALUE		83,501
TOTAL LAND VALUE - MARKET		147,000
TOTAL MARKET VALUE		487,648
SOH/AGL Deduction		243,838
ASSESSED VALUE		243,810
TOTAL EXEMPTION VALUE	HX HB	51,411
BASE TAXABLE VALUE		192,399
TOTAL JUST VALUE		487,648
NCON VALUE		0
INCOME VALUE		
PREVIOUS YEAR MKT VALUE		462,493

PERMIT NUM	DESCRIPTION	AMT	ISSUED

SALES DATA

OFF RECORD Number	DATE	TYPE INST	Q / U	V / I	RSN CD	SALE PRICE
0690/1226	10/18/1993	WD	Q	V	01	100
GRANTOR: CARROLL CHARLES & T						
GRANTEE: CARROLL CHARLES & T						
0690/1225	10/18/1993	QC	U	V	07	100
GRANTOR: CREWS MARY M						
GRANTEE: CARROLL CHARLES R						

BUILDING NOTES

BUILDING DIMENSIONS

BAS=[YR=2012;ORIG=0,0] W60 S60 E60 N22 E8 N16 W8 N22 $
UUS=[YR=2012;ORIG=11,22] E60 S16 W60 N16 $
BAS=[YR=2012;ORIG=-60,0] E60 N12 W60 S12 $
UOP=[YR=2012;ORIG=-60,68] N8 E60 S8 W60 $
.

EXTRA FEATURES

L N	OB/XF CODE	DESCRIPTION	BLD	CAP	L	W	UNITS	UT	Adj R	ADJ UNIT PRICE	ORIG COND	YEAR ON	YEAR ACTUAL	Q	% COND	OB/XF MKT VALUE	NOTES

LAND DESCRIPTION

TOTAL OB/XF 0

L N	USE CODE	CLS	LAND USE DESCRIPTION	CAP	R D	LOC ZONE	FRONT	DEPTH	TOT LND UTS	UNIT TYPE	D T	DPTH FACT	% COND	TOT ADJ	UNIT PRICE	ADJ UNIT PRICE	LAND VALUE	OTHER ADJUSTMENTS AND NOTES	YEAR	DENSITY	DECL	FRZ	YR	CONSRV

REVIEW DATE 01/01/2023 BY CD Total Acres: 7.00 Total Land Value: 147,000 Market: 0 Agricultural: 0 Common: 147,000 PRINTED 07/09/2026 BY SYS