LOT 36
SOUND POINT @ LP PB5/190

2021 LINDA H METCALF REVOCABLE TRUST/METCALF LINDA
101 LONG POINT DRIVE
FERNANDINA BEACH, FL 32034

2026

03-6N-29-00SP-0036-0000

NASSAU COUNTY PROPERTY

BUILDING CHARACTERISTICS

ELEMENT	CD	CONSTRUCTION
Exterior Wall	16	WD FR STUC 100
Roof Structur	03	GABLE/HIP 100
Roof Cover	08	CLAY TILE 100
Interior Wall	05	DRYWALL 50
Interior Wall	08	DECORATIVE 50
Interior Floo	12	HARDWOOD 50
Interior Floo	15	HARDTILE 50
Air Condition	03	CENTRAL 100
Heating Type	04	AIR DUCTED 100
Bedrooms		3 100
Bathrooms		4 100
Frame	02	WOOD FRAME 100
Stories	2.	2. 100
Units		0 100
Quality	02	Quality Level 02

DOR CODE 0100 SINGLE FAMILY
MAP NUM | MKT AREA 10
NEIGHBORHOOD/LOC 10007.00

AREA TYPE	TOTAL GROSS AREA	PCT OF BASE	YEAR	TOT ADJ AREA	SUBAREA MARKET VALUE
BAS	2,371	100	1993	2,371	1,200,365
BAS	330	100	2011	330	167,069
FGR	588	55	1993	323	163,525
FOP	81	30	1993	24	12,151
FOP	154	30	1993	46	23,288
FOP	208	30	1993	62	31,389
FOP	345	30	1993	104	52,652
FUS	1,693	100	1993	1,693	857,114
PTO	713	5	1993	36	18,226
UOP	156	20	1993	31	15,694
TOTALS	7,545			5,201	2,633,108

MARKET ADJUSTMENTS

TYPE	MDL	EFF. AREA	TOT ADJ PTS	EFF. BASE RATE	REPL. COST NEW	AYB	EYB	ECON	FNCT		NORM	% COND
0500	22	5,201	369.6750	613.66	3,191,646	1990	1990	0	0	0	17.50	82.50

1 SFR CUST 100% - 2026 Heated Area: 4394 HX Base Yr 2026

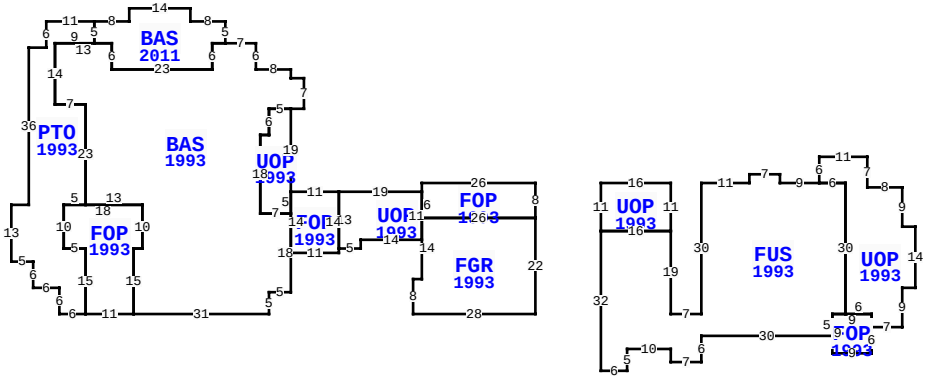

** This building has 13 Sub-Areas

101 LONG POINT DR, FERNANDINA BEACH

BLD DATE		LGL DATE	
XF DATE		LAND DATE	04/08/2024 MLU
INC DATE		AG DATE	

VALUATION SUMMARY

VALUATION BY		STANDARD
Tax Group: 5	Tax Dist:	
BUILDING MARKET VALUE		2,686,832
TOTAL MARKET OB/XF VALUE		41,194
TOTAL LAND VALUE - MARKET		1,610,000
TOTAL MARKET VALUE		4,338,026
SOH/AGL Deduction		0
ASSESSED VALUE		4,338,026
TOTAL EXEMPTION VALUE	HX HB	51,411
BASE TAXABLE VALUE		4,286,615
TOTAL JUST VALUE		4,338,026
NCON VALUE		0
INCOME VALUE		
PREVIOUS YEAR MKT VALUE		4,237,890

PERMIT NUM	DESCRIPTION	AMT	ISSUED
B1529793	ADDITION	69,600	01/01/2015
B1226299	REEMODEL	65,000	08/01/2012
E1225305	REMODEL	0	08/01/2012
P1216056	NEW CONSTR	0	08/01/2012
R1213095	ROOF	41,000	08/01/2012
5778	NEW CONSTR	546,000	06/01/1989

SALES DATA

OFF RECORD Number	DATE	TYPE INST	Q U	V I	RSN CD	SALE PRICE
2870/671	5/21/2026	WD	U	I	11	100
GRANTOR: METCALF ROBERT H & LI						
GRANTEE: 2021 LINDA METCALF						
202645013388	5/05/2026	WD	U	I	11	100
GRANTOR: METCALF ROBERT H & LI						
GRANTEE: METCALF LINDA TRUST						

BUILDING NOTES

BUILDING DIMENSIONS

FOP=[YR=1993] W26S2UOP=[YR=1993] W19 FOP=[YR=1993]
W11UOP=[YR=1993] N19BAS=[YR=1993] E3N7W3N2W8N6W7
BAS=[YR=2011] N5W8N3 W14S3W8PTO=[YR=1993] W11S6W4S36W4S13
E5S6E6S6 E6FOP=[YR=1993] E11 N15E2 N10W18S10E5S15$N15W5N10
E5N23 W7N14E9N5$S5E4S6E23N6E3$ W3S6 W23N6W13S14E7S23E13S10W2
S15 E31N5E5N18W7N18E2N6E5$W5S6 W2
S18E7N5$S14E11N14$S13E5N2E14 N11$S6FGR=[YR=1993]
S14W2S8E28N22W26 $ E26N8$PTR=E15UOP=[YR=1993] E16S11
FUS=[YR=1993] S19E7N30E11N2E7S2E9 UOP=[YR=1993]
N6E11S7E8S9E3S14W3S9W7 FOP=[YR=1993] S6W9N9E9S3$N3W6N30W6$ E6
S30W3S5W30S6W7N3W10S5W6N32 E16$W16N11$W15$.

EXTRA FEATURES

LN	OB/XF CODE	DESCRIPTION	BLD	CAP	L	W	UNITS	UT	Adj R	ADJ UNIT PRICE	ORIG COND	YEAR ON	YEAR ACTUAL	Q	% COND	OB/XF MKT VALUE	NOTES
1	0504	FP-ELECTRI	0	100	0	0	1.00	UT	2,000.00	2,000.00	100	1990	1990	3	64	1,280	
2	0504	FP-ELECTRI	0	100	0	0	1.00	UT	2,000.00	2,000.00	100	1990	1990	3	64	1,280	
5	0300	BOAT DCK W	0	100	0	0	2,441.00	SF	40.00	40.00	100	1990	1990	3	20	19,528	
6	0820	WOOD WALK	0	100	0	0	668.00	SF	11.75	11.75	100	1990	1990	3	40	3,140	
7	1125	CB/STC 6"	0	100	64	6	384.00	SF	7.35	7.35	100	1990	1990	3	54.5	1,538	
8	0322	BOAT LFT L	0	100	0	0	1.00	UT	1,500.00	1,500.00	100	2000	2000	3	20	300	
9	0317	DCK PLNG W	0	100	0	0	2.00	UT	1,000.00	1,000.00	100	2000	2000	3	20	400	
10	0920	CWALL-WD/M	0	100	0	0	176.00	LF	390.00	390.00	100	2000	2000	3	20	13,728	

LAND DESCRIPTION

TOTAL OB/XF 41,194

LN	USE CODE	CLS	LAND USE DESCRIPTION	CAP	RD	LOC ZONE	FRONT	DEPTH	TOT LND UTS	UNIT TYPE	DT	DPTH FACT	% COND	TOT ADJ	UNIT PRICE	ADJ UNIT PRICE	LAND VALUE	OTHER ADJUSTMENTS AND NOTES	YEAR	DENSITY	DECL	FRZ	YR	CONSRV
1	000132	C	RES RIVER	100		PUD	0.00	0.00	1.00	LT		1.00	1.15	1.15	1,400,000.00	1,610,000.00	1,610,000							

REVIEW DATE 01/01/2023 BY CD Total Acres: 0.00 Total Land Value: 1,610,000 Market: 0 Agricultural: 0 Common: 1,610,000 PRINTED 07/09/2026 BY SYS

LOT 36
SOUND POINT @ LP PB5/190

2021 LINDA H METCALF REVOCABLE TRUST/METCALF LINDA
101 LONG POINT DRIVE
FERNANDINA BEACH, FL 32034

2026

03-6N-29-00SP-0036-0000

NASSAU COUNTY PROPERTY

BUILDING CHARACTERISTICS

ELEMENT	CD	CONSTRUCTION
Exterior Wall	16	WD FR STUC 100
Roof Structur	03	GABLE/HIP 100
Roof Cover	08	CLAY TILE 100
Interior Wall	05	DRYWALL 100
Interior Floo	11	CLAY TILE 100
Air Condition	03	CENTRAL 100
Heating Type	04	AIR DUCTED 100
Bedrooms		0 100
Bathrooms		0.5 100
Frame	02	WOOD FRAME 100
Stories	1.	1. 100
Units		0 100
Quality	04	Quality Level 04

DOR CODE 0100 SINGLE FAMILY
MAP NUM | MKT AREA 10
NEIGHBORHOOD/LOC 10007.00

AREA TYPE	TOTAL GROSS AREA	PCT OF BASE	YEAR	TOT ADJ AREA	SUBAREA MARKET VALUE
BAS	525	100	2015	525	51,097
FOP	90	30	2015	27	2,628
TOTALS	615			552	53,724

MARKET ADJUSTMENTS

TYPE	MDL	EFF. AREA	TOT ADJ PTS	EFF. BASE RATE	REPL. COST NEW	AYB	EYB	ECON	FNCT		NORM	% COND
0150	11	552	182.9520	102.45	56,552	2015	2015	0	0	0	5.00	95.00

2 ACCESORY U 100% - 2026 Heated Area: 525 HX Base Yr 2026

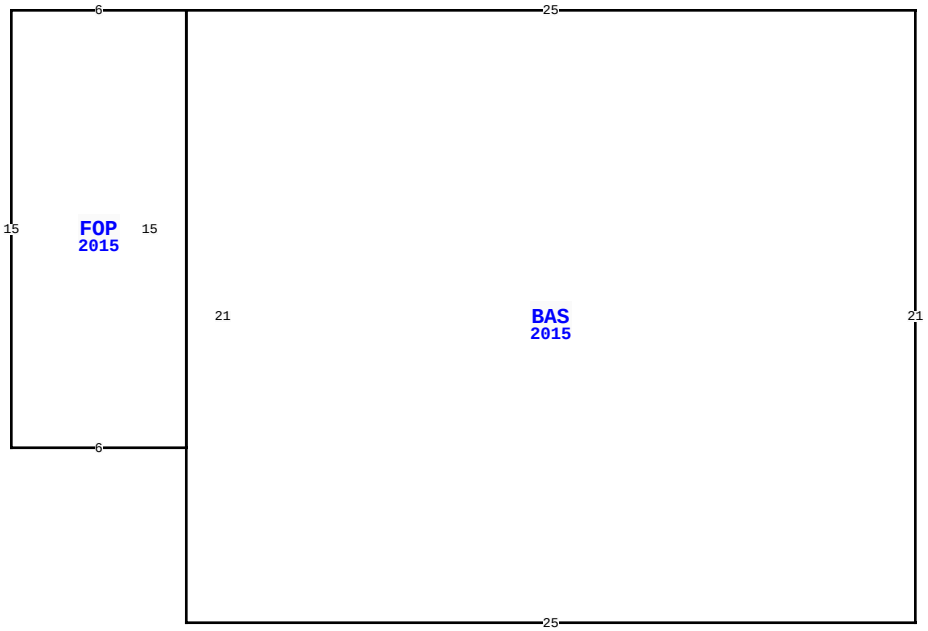

101 LONG POINT DR, FERNANDINA BEACH

BLD DATE		LGL DATE	
XF DATE		LAND DATE	04/08/2024 MLU
INC DATE		AG DATE	

VALUATION SUMMARY

VALUATION BY		STANDARD
Tax Group: 5	Tax Dist:	
BUILDING MARKET VALUE		2,686,832
TOTAL MARKET OB/XF VALUE		41,194
TOTAL LAND VALUE - MARKET		1,610,000
TOTAL MARKET VALUE		4,338,026
SOH/AGL Deduction		0
ASSESSED VALUE		4,338,026
TOTAL EXEMPTION VALUE	HX HB	51,411
BASE TAXABLE VALUE		4,286,615
TOTAL JUST VALUE		4,338,026
NCON VALUE		0
INCOME VALUE		
PREVIOUS YEAR MKT VALUE		4,237,890

PERMIT NUM	DESCRIPTION	AMT	ISSUED

SALES DATA

OFF RECORD Number	DATE	TYPE INST	Q / U	V / I	RSN CD	SALE PRICE
2870/671	5/21/2026	WD	U	I	11	100
GRANTOR: METCALF ROBERT H & LI						
GRANTEE: 2021 LINDA METCALF						
202645013388	5/05/2026	WD	U	I	11	100
GRANTOR: METCALF ROBERT H & LI						
GRANTEE: METCALF LINDA TRUST						

BUILDING NOTES

BUILDING DIMENSIONS

BAS=[YR=2015] W25 FOP=[YR=2015] W6 S15 E6 N15$ S21 E25 N21$.

EXTRA FEATURES

LN	OB/XF CODE	DESCRIPTION	BLD	CAP	L	W	UNITS	UT	Adj R	ADJ UNIT PRICE	ORIG COND	YEAR ON	YEAR ACTUAL	Q	% COND	OB/XF MKT VALUE	NOTES

LAND DESCRIPTION

TOTAL OB/XF 0

LN	USE CODE	CLS	LAND USE DESCRIPTION	CAP	RD	LOC ZONE	FRONT	DEPTH	TOT LND UTS	UNIT TYPE	DT	DPTH FACT	% COND	TOT ADJ	UNIT PRICE	ADJ UNIT PRICE	LAND VALUE	OTHER ADJUSTMENTS AND NOTES	YEAR	DENSITY	DECL	FRZ	YR	CONSRV

REVIEW DATE 01/01/2023 BY CD Total Acres: 0.00 Total Land Value: 1,610,000 Market: 0 Agricultural: 0 Common: 1,610,000 PRINTED 07/09/2026 BY SYS