LOT 77
IN OR 1676/1308
LONG POINT #1 PB 5/85-89

LEATHERY DONALD L TRUSTEE
35 SALT MARSH DRIVE
FERNANDINA BEACH, FL 32034

2026

03-6N-29-00LP-0077-0000

BUILDING CHARACTERISTICS

ELEMENT	CD	CONSTRUCTION
Exterior Wall	16	WD FR STUC 100
Roof Structur	08	IRREGULAR 100
Roof Cover	10	WD SHINGLE 100
Interior Wall	05	DRYWALL 100
Interior Floo	14	CARPET 60
Interior Floo	12	HARDWOOD 40
Air Condition	03	CENTRAL 100
Heating Type	04	AIR DUCTED 100
Bedrooms		4 100
Bathrooms		4.5 100
Frame	02	WOOD FRAME 100
Stories	2.	2. 100
Units		0 100
Quality	03	Quality Level 03

DOR CODE 0100 SINGLE FAMILY
MAP NUM | MKT AREA 10
NEIGHBORHOOD/LOC 10007.00

AREA TYPE	TOTAL GROSS AREA	PCT OF BASE	YEAR	TOT ADJ AREA	SUBAREA MARKET VALUE
BAS	2,759	100	1993	2,759	791,836
BAS	221	100	2005	221	63,428
BAS	551	100	2005	551	158,137
BAS	104	100	2009	104	29,849
BAS	132	100	2009	132	37,884
FGR	816	55	1993	449	128,864
FOP	144	30	2005	43	12,341
FUS	1,776	100	1993	1,776	509,714
UOP	70	20	1993	14	4,018
UOP	523	20	1993	105	30,135
TOTALS	7,096			6,154	1,766,204

MARKET ADJUSTMENTS

TYPE	MDL	EFF. AREA	TOT ADJ PTS	EFF. BASE RATE	REPL. COST NEW	AYB	EYB	ECON	FNCT		NORM	% COND
0500	12	6,154	192.1000	318.89	1,962,449	1990	2005	0	0	0	10.00	90.00

1 SFR CUST 100% - 2001 Heated Area: 5543 HX Base Yr 2001

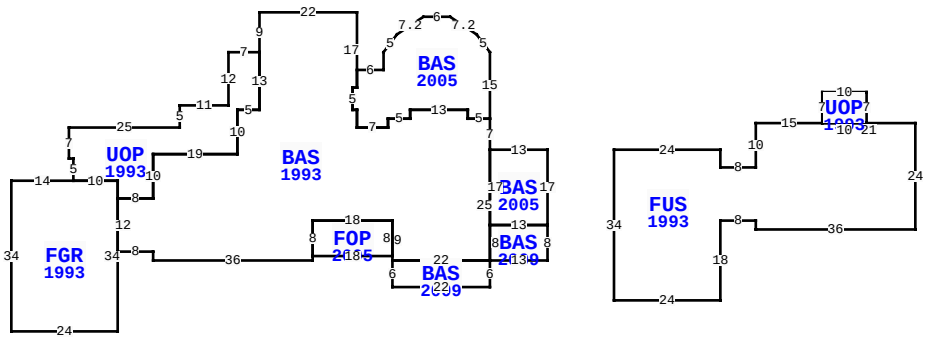

35 SALT MARSH DR, FERNANDINA BEACH

BLD DATE		LGL DATE	
XF DATE		LAND DATE	04/08/2024 MLU
INC DATE		AG DATE	

EXTRA FEATURES

L N	OB/XF CODE	DESCRIPTION	BLD	CAP	L	W	UNITS	UT	Adj R	ADJ UNIT PRICE	ORIG COND	YEAR ON	YEAR ACTUAL	Q	% COND	OB/XF MKT VALUE	NOTES
1	0300	BOAT DCK W	0	100	227	4	908.00	SF	10.00	10.00	100	1990	1990	3	20	1,816	
2	0860	POOL/SPA	0	100	0	0	1.00	UT	50,000.00	50,000.00	100	1990	1990	04	85	42,500	
3	0504	FP-ELECTRI	0	100	0	0	1.00	UT	2,000.00	2,000.00	100	1990	1990	3	64	1,280	
4	0504	FP-ELECTRI	0	100	0	0	1.00	UT	2,000.00	2,000.00	100	1990	1990	3	64	1,280	
5	0504	FP-ELECTRI	0	100	0	0	1.00	UT	2,000.00	2,000.00	100	1990	1990	3	64	1,280	
8	1126	CB/STC 8"	0	100	0	0	174.00	SF	8.00	8.00	100	1990	1990	3	54.5	759	
9	1242	WD DECK A	0	100	33	6	198.00	SF	10.00	10.00	100	1990	1990	3	20	396	
10	1242	WD DECK A	0	100	26	4	104.00	SF	10.00	10.00	100	1990	1990	3	20	208	
11	0303	FLT DOCK W	0	100	20	6	120.00	SF	13.00	13.00	100	1990	1990	3	20	312	
16	1242	WD DECK A	0	100	0	0	48.00	SF	10.00	10.00	100	2005	2005	3	21	101	

TOTAL OB/XF 49,932

NASSAU COUNTY PROPERTY

PAGE 1 of 2 5

VALUATION SUMMARY

VALUATION BY		STANDARD
Tax Group: 5	Tax Dist:	
BUILDING MARKET VALUE		1,766,204
TOTAL MARKET OB/XF VALUE		62,832
TOTAL LAND VALUE - MARKET		1,400,000
TOTAL MARKET VALUE		3,229,036
SOH/AGL Deduction		1,753,011
ASSESSED VALUE		1,476,025
TOTAL EXEMPTION VALUE	HX HB	51,411
BASE TAXABLE VALUE		1,424,614
TOTAL JUST VALUE		3,229,036
NCON VALUE		0
INCOME VALUE		
PREVIOUS YEAR MKT VALUE		3,553,129

PERMIT NUM	DESCRIPTION	AMT	ISSUED
B25097	REPAIR/RRF	16,478	09/01/2011
G01610	GAS	395	03/01/2011
R11948	REPAIR/RRF	2,388	06/01/2009
B22235	ADDITION	28,000	01/01/2009
R0507715	REPAIR/RRF	70,000	06/01/2005
5585	NEW CONSTR	426,548	03/20/1989

SALES DATA

OFF RECORD Number	DATE	TYPE INST	Q U	V I	RSN CD	SALE PRICE
1676/1308	3/31/2010	WD	U	I	30	441,900
GRANTOR: LEATHERY DONALD L & A						
GRANTEE: LEATHERY DONALD L T						
0938/0221	6/26/2000	WD	U	I		1,550,000
GRANTOR: BISSELL HOWARD C & SA						
GRANTEE: LEATHERY DONALD L &						

BUILDING NOTES

BUILDING DIMENSIONS

BAS=[YR=2005] W13 BAS=[YR=1993] N7 BAS=[YR=2005] N15 U4 L3 U4 L6 W6 L6 D4 L3 D4 S4 W6 S4 W1 S5 E1 S4 E7 N2 E5 N2 E13 S2 E5$ W5 N2 W13 S2 W5 S2 W7 N4 W1 N5 E1 N17 W22 S9 UOP=[YR=1993] W7 S12 W11 S5 W25 S7 E1 S5 FGR=[YR=1993] W14 S34 E24 N34 W10$ E10 S4 E8 N10E19 N10 E5 N13$ S13 W5 S10 W19S10 W8 S12 E8 S2 E36 N1 FOP=[YR=2005] E18 N8 W18 S8$ N8 E18 S9 BAS=[YR=2009] S6 E22 N6 W22$ E22 BAS=[YR=2009] E13 N8 W13 S8$ N25$ S17 E13 N17$ PTR= E15 FUS=[YR=1993] E24 S4 E8 N10 E15 UOP=[YR=1993] N7 E10 S7 W10 $ E21 S24 W36 N2 W8 S18 W24 N34 $ W15 $.

LAND DESCRIPTION

L N	USE CODE	CLS	LAND USE DESCRIPTION	CAP	R D	LOC ZONE	FRONT	DEPTH	TOT LND UTS	UNIT TYPE	D T	DPTH FACT	% COND	TOT ADJ	UNIT PRICE	ADJ UNIT PRICE	LAND VALUE	OTHER ADJUSTMENTS AND NOTES	YEAR	DENSITY	DECL	FRZ	YR	CONSRV
1	000116	C	RES MARSH	100		PUD	0.00	0.00	1.00	LT		1.00	1.00	1.00	1,400,000.00	1,400,000.00	1,400,000							

REVIEW DATE 01/01/2023 BY CD Total Acres: 0.00 Total Land Value: 1,400,000 Market: 0 Agricultural: 0 Common: 1,400,000 PRINTED 07/09/2026 BY SYS

LOT 77
IN OR 1676/1308
LONG POINT #1 PB 5/85-89

LEATHERY DONALD L TRUSTEE
35 SALT MARSH DRIVE
FERNANDINA BEACH, FL 32034

2026

03-6N-29-00LP-0077-0000

NASSAU COUNTY PROPERTY

BUILDING CHARACTERISTICS

ELEMENT	CD	CONSTRUCTION

DOR CODE	0100	SINGLE FAMILY	
MAP NUM		MKT AREA	10
NEIGHBORHOOD/LOC	10007.00		

AREA TYPE	TOTAL GROSS AREA	PCT OF BASE	YEAR	TOT ADJ AREA	SUBAREA MARKET VALUE
TOTALS					

MARKET ADJUSTMENTS

TYPE	MDL	EFF. AREA	TOT ADJ PTS	EFF. BASE RATE	REPL. COST NEW	AYB	EYB	ECON	FNCT		NORM	% COND

VALUATION SUMMARY

VALUATION BY		STANDARD
Tax Group: 5	Tax Dist:	
BUILDING MARKET VALUE		1,766,204
TOTAL MARKET OB/XF VALUE		62,832
TOTAL LAND VALUE - MARKET		1,400,000
TOTAL MARKET VALUE		3,229,036
SOH/AGL Deduction		1,753,011
ASSESSED VALUE		1,476,025
TOTAL EXEMPTION VALUE	HX HB	51,411
BASE TAXABLE VALUE		1,424,614
TOTAL JUST VALUE		3,229,036
NCON VALUE		0
INCOME VALUE		
PREVIOUS YEAR MKT VALUE		3,553,129

PERMIT NUM	DESCRIPTION	AMT	ISSUED

SALES DATA

OFF RECORD Number	DATE	TYPE INST	Q / U	V / I	RSN CD	SALE PRICE
1676/1308	3/31/2010	WD	U	I	30	441,900
GRANTOR: LEATHERY DONALD L & A						
GRANTEE: LEATHERY DONALD L T						
0938/0221	6/26/2000	WD	U	I		1,550,000
GRANTOR: BISSELL HOWARD C & SA						
GRANTEE: LEATHERY DONALD L &						

BLD DATE		LGL DATE	
XF DATE		LAND DATE	04/08/2024 MLU
INC DATE		AG DATE	

BUILDING NOTES

BUILDING DIMENSIONS

EXTRA FEATURES

LN	OB/XF CODE	DESCRIPTION	BLD	CAP	L	W	UNITS	UT	Adj R	ADJ UNIT PRICE	ORIG COND	YEAR ON	YEAR ACTUAL	Q	% COND	OB/XF MKT VALUE	NOTES
17	1242	WD DECK A	0	100	4	5	20.00	SF	10.00	10.00	100	2009	2009	3	31	62	
18	0300	BOAT DCK W	0	100	43	3	129.00	SF	40.00	40.00	100	2009	2009	3	48	2,477	
19	0525	GAZEBO	0	100	0	0	1.00	UT	5,000.00	5,000.00	100	2009	2009	3	48	2,400	
20	1126	CB/STC 8"	0	100	4	5	20.00	SF	8.00	8.00	100	2009	2009	3	88	141	
22	0920	CWALL-WD/M	0	100	0	0	43.00	LF	390.00	390.00	100	2009	2009	3	31	5,199	
23	0920	CWALL-WD/M	0	100	0	0	32.00	LF	390.00	390.00	100	2005	2005	3	21	2,621	

LAND DESCRIPTION

TOTAL OB/XF 12,900

LN	USE CODE	CLS	LAND USE DESCRIPTION	CAP	RD	LOC ZONE	FRONT	DEPTH	TOT LND UTS	UNIT TYPE	DT	DPTH FACT	% COND	TOT ADJ	UNIT PRICE	ADJ UNIT PRICE	LAND VALUE	OTHER ADJUSTMENTS AND NOTES	YEAR	DENSITY	DECL	FRZ	YR	CONSRV

REVIEW DATE 01/01/2023 BY CD Total Acres: 0.00 Total Land Value: 1,400,000 Market: 0 Agricultural: 0 Common: 1,400,000 PRINTED 07/09/2026 BY SYS