LOT 35
IN OR 2119/1069
LONG POINT #1 PB 5/85-89

JORDAN BRADFORD D & SUSAN D
71 LONG POINT DRIVE
FERNANDINA BEACH, FL 32034

2026

03-6N-29-00LP-0035-0000

BUILDING CHARACTERISTICS

ELEMENT	CD	CONSTRUCTION
Exterior Wall	16	WD FR STUC 100
Roof Structur	08	IRREGULAR 100
Roof Cover	03	COMP SHNGL 100
Interior Wall	05	DRYWALL 90
Interior Wall	08	DECORATIVE 10
Interior Floo	14	CARPET 80
Interior Floo	11	CLAY TILE 20
Air Condition	03	CENTRAL 100
Heating Type	04	AIR DUCTED 100
Bedrooms		3 100
Bathrooms		3.5 100
Frame	02	WOOD FRAME 100
Stories	2.	2. 100
Units		0 100
Quality	03	Quality Level 03
DOR CODE	0100	SINGLE FAMILY
MAP NUM		MKT AREA 10
NEIGHBORHOOD/LOC	10007.00	

AREA TYPE	TOTAL GROSS AREA	PCT OF BASE	YEAR	TOT ADJ AREA	SUBAREA MARKET VALUE
BAS	2,108	100	1995	2,108	384,503
FGR	600	55	1995	330	60,193
FOP	78	30	1995	23	4,196
FOP	120	30	1995	36	6,566
FOP	168	30	1995	50	9,121
FUS	1,225	100	1995	1,225	223,442
UOP	24	20	1995	5	912
UOP	58	20	1995	12	2,189
UOP	132	20	1995	26	4,742
TOTALS	4,513			3,815	695,862

MARKET ADJUSTMENTS

TYPE	MDL	EFF. AREA	TOT ADJ PTS	EFF. BASE RATE	REPL. COST NEW	AYB	EYB	ECON	FNCT		NORM	% COND
0500	11	3,815	129.2733	214.59	818,661	1995	1995	0	0	0	15.00	85.00

1 SFR CUST 100% - 2019 Heated Area: 3333 HX Base Yr 2019

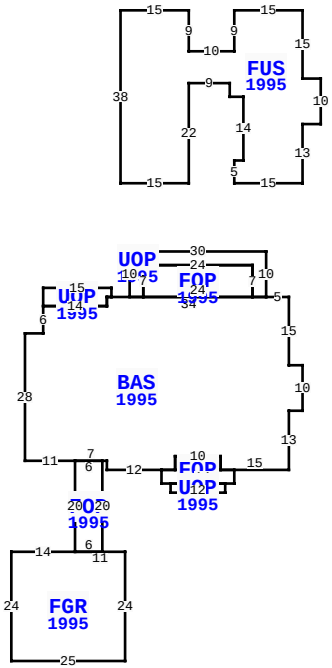

71 LONG POINT DR, FERNANDINA BEACH

BLD DATE		LGL DATE	
XF DATE		LAND DATE	04/08/2024 MLU
INC DATE		AG DATE	

NASSAU COUNTY PROPERTY

PAGE 1 of 1 5

VALUATION SUMMARY

VALUATION BY		STANDARD
Tax Group: 5	Tax Dist:	
BUILDING MARKET VALUE		695,862
TOTAL MARKET OB/XF VALUE		46,398
TOTAL LAND VALUE - MARKET		800,000
TOTAL MARKET VALUE		1,542,260
SOH/AGL Deduction		691,835
ASSESSED VALUE		850,425
TOTAL EXEMPTION VALUE	HX HB	51,411
BASE TAXABLE VALUE		799,014
TOTAL JUST VALUE		1,542,260
NCON VALUE		0
INCOME VALUE		
PREVIOUS YEAR MKT VALUE		1,499,399

PERMIT NUM	DESCRIPTION	AMT	ISSUED
B9401142	SWIM POOL	15,000	07/01/1994
B9401122	NEW CONSTR	339,260	06/01/1994

SALES DATA

OFF RECORD Number	DATE	TYPE INST	Q / U	V / I	RSN CD	SALE PRICE
2119/1069	5/08/2017	WD	Q	I	01	730,000
GRANTOR: FRYBURG MARC A						
GRANTEE: JORDAN BRADFORD D &						
2107/1484	2/21/2017	WD	U	I	16	259,000
GRANTOR: HOLLWEG ANNE C						
GRANTEE: FRYBURG MARC A						

BUILDING NOTES

BUILDING DIMENSIONS

BAS=[YR=1995] W3 N15 W5 UOP=[YR=1995] N10 W30 S10 E3
FOP=[YR=1995] E24 N7 W24 S7 $ N7 E24 S7 E3 $ W34
UOP=[YR=1995] N2 W15 S4 E14 N2 E1 $ W1 S2 W14 S6 W4 S28 E11
FOP=[YR=1995] S20 FGR=[YR=1995] W14 S24 E25 N24 W11 $ E6 N20
W6 $ E7 S2 E12 FOP=[YR=1995] S3 E2 UOP=[YR=1995] S2 E12 N2
W12 $ E14 N3 W3 N3 W10 S3 W3 $ E3 N3 E10 S3 E15 N13 E3 N10 $
PTR= N40 FUS=[YR=1995] N13 E4 N10 W4 N15 W15 S9 W10 N9 W15
S38 E15 N22 E9 S3 E3 S14 W2 S5 E15 $ S40 $.

EXTRA FEATURES

LN	OB/XF CODE	DESCRIPTION	BLD	CAP	L	W	UNITS	UT	Adj R	ADJ UNIT PRICE	ORIG COND	YEAR ON	YEAR ACTUAL	Q	% COND	OB/XF MKT VALUE	NOTES
1	0504	FP-ELECTRI	0	100	0	0	1.00	UT	2,000.00	2,000.00	100	1995	1995	3	74	1,480	
2	0860	POOL/SPA	0	100	0	0	1.00	UT	50,000.00	50,000.00	100	1995	1995	04	85	42,500	
8	1126	CB/STC 8"	0	100	0	0	78.00	SF	8.00	8.00	100	1995	1995	3	66	412	
11	1126	CB/STC 8"	0	100	0	0	65.00	SF	8.00	8.00	100	1995	1995	3	66	343	
14	1126	CB/STC 8"	0	100	0	0	315.00	SF	8.00	8.00	100	1995	1995	3	66	1,663	

LAND DESCRIPTION

TOTAL OB/XF 46,398

LN	USE CODE	CLS	LAND USE DESCRIPTION	CAP	RD	LOC ZONE	FRONT	DEPTH	TOT LND UTS	UNIT TYPE	DT	DPTH FACT	% COND	TOT ADJ	UNIT PRICE	ADJ UNIT PRICE	LAND VALUE	OTHER ADJUSTMENTS AND NOTES	YEAR	DENSITY	DECL	FRZ	YR	CONSRV
1	000116	C	RES MARSH	100		PUD	0.00	0.00	1.00	LT		1.00	1.00	1.00	800,000.00	800,000.00	800,000							

REVIEW DATE 01/01/2023 BY CD Total Acres: 0.00 Total Land Value: 800,000 Market: 0 Agricultural: 0 Common: 800,000 PRINTED 07/09/2026 BY SYS