LOT 34 IN OR 932/1368
LONG POINT #1 PB 5/85-89

DUDIAK ROBERT L/MARTIN SUSAN E
73 LONG POINT DRIVE
FERNANDINA BEACH, FL 32034

2026

03-6N-29-00LP-0034-0000

BUILDING CHARACTERISTICS

ELEMENT	CD	CONSTRUCTION
Exterior Wall	17	CB STUCCO 80
Exterior Wall	16	WD FR STUC 20
Roof Structur	08	IRREGULAR 100
Roof Cover	03	COMP SHNGL 100
Interior Wall	05	DRYWALL 100
Interior Floo	11	CLAY TILE 70
Interior Floo	14	CARPET 30
Air Condition	03	CENTRAL 100
Heating Type	04	AIR DUCTED 100
Bedrooms		4 100
Bathrooms		3 100
Frame	02	WOOD FRAME 100
Stories	2.	2. 100
Units		0 100
Quality	05	Quality Level 05
DOR CODE	0100	SINGLE FAMILY
MAP NUM		MKT AREA 10
NEIGHBORHOOD/LOC	10007.00	

AREA TYPE	TOTAL GROSS AREA	PCT OF BASE	YEAR	TOT ADJ AREA	SUBAREA MARKET VALUE
BAS	465	100	2003	465	102,341
BAS	3,014	100	2003	3,014	663,345
FGR	874	55	2003	481	105,862
FOP	112	30	2003	34	7,483
FOP	117	30	2003	35	7,703
FOP	204	30	2003	61	13,426
FOP	451	30	2003	135	29,712
FOP	598	30	2003	179	39,396
FUS	846	100	2003	846	186,194
UOP	62	20	2003	12	2,641
TOTALS	7,352			5,384	1,184,954

MARKET ADJUSTMENTS

TYPE	MDL	EFF. AREA	TOT ADJ PTS	EFF. BASE RATE	REPL. COST NEW	AYB	EYB	ECON	FNCT		NORM	% COND
0500	11	5,384	148.9676	247.29	1,331,409	2003	2003	0	0	0	11.00	89.00

1 SFR CUST 100% - 2010 Heated Area: 4325 HX Base Yr 2010

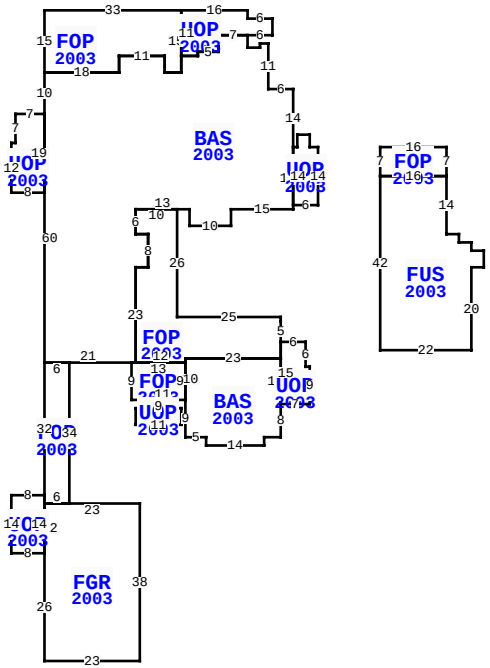

** This building has 15 Sub-Areas

73 LONG POINT DR, FERNANDINA BEACH

BLD DATE		LGL DATE	
XF DATE		LAND DATE	04/08/2024 MLU
INC DATE		AG DATE	

NASSAU COUNTY PROPERTY

PAGE 1 of 1 5

VALUATION SUMMARY

VALUATION BY		STANDARD
Tax Group: 5	Tax Dist:	
BUILDING MARKET VALUE		1,184,954
TOTAL MARKET OB/XF VALUE		58,815
TOTAL LAND VALUE - MARKET		800,000
TOTAL MARKET VALUE		2,043,769
SOH/AGL Deduction		912,071
ASSESSED VALUE		1,131,698
TOTAL EXEMPTION VALUE	HX HB	51,411
BASE TAXABLE VALUE		1,080,287
TOTAL JUST VALUE		2,043,769
NCON VALUE		0
INCOME VALUE		
PREVIOUS YEAR MKT VALUE		2,001,632

PERMIT NUM	DESCRIPTION	AMT	ISSUED
B0210289	NEW CONSTR	371,605	09/01/2002

SALES DATA

OFF RECORD Number	DATE	TYPE INST	Q U	V I	RSN CD	SALE PRICE
0932/1368	5/17/2000	WD	Q	V		310,000
GRANTOR: DETURK PHILLIP & BARB						
GRANTEE: DUDIAK ROBERT L & S						
0829/0333	4/08/2018	WD	Q	V		119,000
GRANTOR: LAMBERT GEORGE H & MA						
GRANTEE: DETURK PHILIP & BAR						

BUILDING NOTES

BUILDING DIMENSIONS

BAS=[YR=2003;ORIG=-6,0] N14 W6 N11 W2 S1 W3 N3 W7 S4 W5 S1 W4 S4 W4 N4 W11 S4 W18 S10 S60 E21 E1 N23 E3 N8 W3 N6 E13 S4 E10 N4 E15 N15 $
FGR=[YR=2003;ORIG=-66,98] S26 E23 N38 W23 S12 $
FUS=[YR=2003;ORIG=31,7] S14 E3 S2 E3 S2 E3 S4 W3 S20 W22 N42 E16 $
FOP=[YR=2003;ORIG=-9,47] N5 N1 W25 N26 W10 S6 E3 S8 W3 S23 E12 N1 E23 N4 $
BAS=[YR=2003;ORIG=-32,61] S9 E5 S2 E14 N2 E4 N8 N11 W23 S10 $
FOP=[YR=2003;ORIG=-33,-33] W33 S15 E18 N4 E11 S4 E4 N15 $
FOP=[YR=2003;ORIG=-66,52] S32 S2 E6 N34 W6 $
UOP=[YR=2003;ORIG=-17,-27] E6 N4 W6 N2 W16 S11 E4 N1 E5 N4 E7

EXTRA FEATURES

LN	OB/XF CODE	DESCRIPTION	BLD	CAP	L	W	UNITS	UT	Adj R	ADJ UNIT PRICE	ORIG COND	YEAR ON	YEAR ACTUAL	Q	% COND	OB/XF MKT VALUE	NOTES
1	0504	FP-ELECTRI	0	100	0	0	1.00	UT	2,000.00	2,000.00	100	2003	2003	3	85	1,700	
4	1126	CB/STC 8"	0	100	0	0	100.00	SF	8.00	8.00	100	2003	2003	3	80	640	
6	0860	POOL/SPA	0	100	0	0	1.00	UT	60,000.00	60,000.00	100	2003	2003	05	85	51,000	
8	0300	BOAT DCK W	0	100	118	4	472.00	SF	40.00	40.00	100	2003	2003	3	29	5,475	

LAND DESCRIPTION

TOTAL OB/XF 58,815

LN	USE CODE	CLS	LAND USE DESCRIPTION	CAP	RD	LOC ZONE	FRONT	DEPTH	TOT LND UTS	UNIT TYPE	DT	DPTH FACT	% COND	TOT ADJ	UNIT PRICE	ADJ UNIT PRICE	LAND VALUE	OTHER ADJUSTMENTS AND NOTES	YEAR	DENSITY	DECL	FRZ	YR	CONSRV
1	000116	C	RES MARSH	100		PUD	0.00	0.00	1.00	LT		1.00	1.00	1.00	800,000.00	800,000.00	800,000							

REVIEW DATE 01/01/2023 BY CD Total Acres: 0.00 Total Land Value: 800,000 Market: 0 Agricultural: 0 Common: 800,000 PRINTED 07/09/2026 BY SYS