LOT 16 & E1/2 OF LOT 17
LONG POINT #1 PB 5/85-89

BLUM ERIC L REVOCABLE TRUST/RICHTER CAROL REVOCABL
48 LONG POINT DR
FERNANDINA BEACH, FL 32034

2026

03-6N-29-00LP-0016-0000

BUILDING CHARACTERISTICS

ELEMENT	CD	CONSTRUCTION
Exterior Wall	16	WD FR STUC 100
Roof Structur	08	IRREGULAR 100
Roof Cover	08	CLAY TILE 100
Interior Wall	05	DRYWALL 100
Interior Floo	11	CLAY TILE 70
Interior Floo	14	CARPET 30
Air Condition	03	CENTRAL 100
Heating Type	04	AIR DUCTED 100
Bedrooms		3 100
Bathrooms		3.5 100
Frame	02	WOOD FRAME 100
Stories	2.	2. 100
Units		0 100
Quality	05	Quality Level 05
DOR CODE	0100	SINGLE FAMILY
MAP NUM		MKT AREA 10
NEIGHBORHOOD/LOC	10007.00	

AREA TYPE	TOTAL GROSS AREA	PCT OF BASE	YEAR	TOT ADJ AREA	SUBAREA MARKET VALUE
BAS	3,162	100	2000	3,162	736,398
FGR	800	55	2000	440	102,471
FOP	10	30	2000	3	698
FOP	60	30	2000	18	4,192
FOP	144	30	2000	43	10,014
FSP	408	40	2000	163	37,961
FST	52	55	2000	29	6,754
FST	60	55	2000	33	7,685
FST	90	55	2000	50	11,645
FST	608	55	2000	334	77,785
TOTALS	7,690			5,820	1,355,420

MARKET ADJUSTMENTS

TYPE	MDL	EFF. AREA	TOT ADJ PTS	EFF. BASE RATE	REPL. COST NEW	AYB	EYB	ECON	FNCT		NORM	% COND
0500	11	5,820	160.3372	266.16	1,549,051	2000	2000	0	0	0	12.50	87.50

1 SFR CUST 100% - 2019 Heated Area: 4518 HX Base Yr 2019

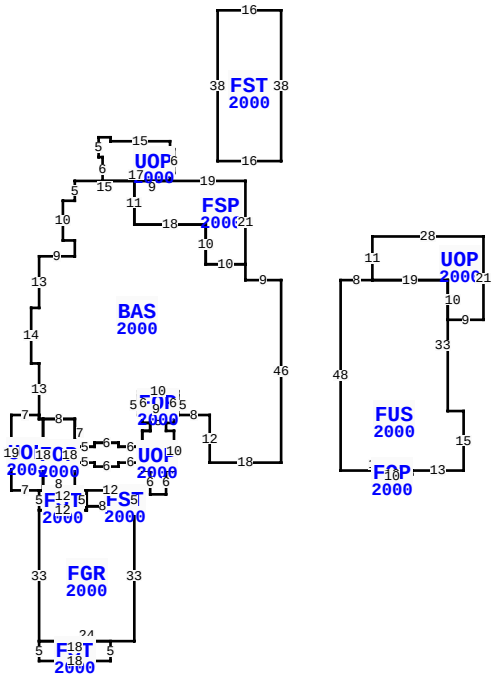

** This building has 15 Sub-Areas

48 LONG POINT DR, FERNANDINA BEACH

BLD DATE		LGL DATE	
XF DATE		LAND DATE	04/23/2026 MLU
INC DATE		AG DATE	

NASSAU COUNTY PROPERTY

PAGE 1 of 1 5

VALUATION SUMMARY

VALUATION BY		STANDARD
Tax Group: 5	Tax Dist:	
BUILDING MARKET VALUE		1,355,420
TOTAL MARKET OB/XF VALUE		3,228
TOTAL LAND VALUE - MARKET		1,200,000
TOTAL MARKET VALUE		2,558,648
SOH/AGL Deduction		1,067,193
ASSESSED VALUE		1,491,455
TOTAL EXEMPTION VALUE	HX HB	51,411
BASE TAXABLE VALUE		1,440,044
TOTAL JUST VALUE		2,558,648
NCON VALUE		0
INCOME VALUE		
PREVIOUS YEAR MKT VALUE		2,454,905

PERMIT NUM	DESCRIPTION	AMT	ISSUED
B1803122	WINDOWS	60,000	03/27/2018
B1801089	REMODEL	55,000	02/01/2018
B9905932	NEW CONSTR	350,000	04/01/1999

SALES DATA

OFF RECORD Number	DATE	TYPE INST	Q / U	V / I	RSN CD	SALE PRICE
2388/0675	8/31/2020	WD	U	V	37	254,400
GRANTOR: CORREA JUAN J						
GRANTEE: REVOCABLE TRUST OF						
2305/1148	9/20/2019	QC	U	I	11	100
GRANTOR: BLUM ERIC L & CAROL A						
GRANTEE: BLUM ERIC REV TRUST						

BUILDING NOTES

BUILDING DIMENSIONS

BAS=[YR=2000] W9 N4 FSP=[YR=2000] N21 W19 UOP=[YR=2000] N2 E1 N6 W1 N2 W15 N1 W3 S5 E1 S6 E17 $ W9 S11 E18 S10 E10 $ W10 N10 W18 N11 W15 S5 W3 S10 E3 S4 W9 S13 W2 S14 E2 S13
UOP=[YR=2000] W7 S19 E7 FST=[YR=2000] S5 FGR=[YR=2000] S33
FST2000 = S5 E18 N5 W18 $ E24 N33 FST=[YR=2000] N5 W12S4E8S1E4$ W4N1W8S1W12$E12N5W12$E1N18W1N1 $ S1
E1FOP=[YR=2000] S18E8N18W8$ E8 S7UOP=[YR=2000] S4E5S1E6N1E6S2E2 S6 E4N6E2N10W2N2E2N2FOP=[YR=2000] E1N6 W10S6E9$W8S2E2 S2W2S4W6 N1W6S1 W5$E5N1 E6S1E6 N4E2N2W2N2 W1 N5 E10S5 E8 S12 E18 N46 $ PTR= E15 FUS=[YR=2000]
E8UOP=[YR=2000] N11 E28 S21 W9 N10 W19$ E19S33E4 S15 W13 FOP=[YR=2000] S1W10N1E10$W18N48$ W15$ PTR= N30 FST=[YR=2000]

EXTRA FEATURES

LN	OB/XF CODE	DESCRIPTION	BLD	CAP	L	W	UNITS	UT	Adj R	ADJ UNIT PRICE	ORIG COND	YEAR ON	YEAR ACTUAL	Q	% COND	OB/XF MKT VALUE	NOTES
1	0504	FP-ELECTRI	0	100	0	0	1.00	UT	2,000.00	2,000.00	100	2000	2000	3	81	1,620	
3	1126	CB/STC 8"	0	100	0	0	268.00	SF	8.00	8.00	100	2000	2000	3	75	1,608	

LAND DESCRIPTION

TOTAL OB/XF 3,228

LN	USE CODE	CLS	LAND USE DESCRIPTION	CAP	RD	LOC ZONE	FRONT	DEPTH	TOT LND UTS	UNIT TYPE	DT	DPTH FACT	% COND	TOT ADJ	UNIT PRICE	ADJ UNIT PRICE	LAND VALUE	OTHER ADJUSTMENTS AND NOTES	YEAR	DENSITY	DECL	FRZ	YR	CONSRV
1	000140	C	RES GOLF	100		PUD	0.00	0.00	1.00	LT		1.00	1.00	1.00	800,000.00	800,000.00	800,000							
2	000140	C	RES GOLF	100		PUD	0.00	0.00	0.50	LT		1.00	1.00	1.00	800,000.00	800,000.00	400,000							

REVIEW DATE 01/01/2023 BY CD Total Acres: 0.00 Total Land Value: 1,200,000 Market: 0 Agricultural: 0 Common: 1,200,000 PRINTED 07/09/2026 BY SYS