LOT 7
ESMT PT OR 1810/159
LONG POINT #1 PB 5/85-89

HENDRICKS SCOT R & JILL C L/E/
30 LONG POINT DR
FERNANDINA BEACH, FL 32034

2026

03-6N-29-00LP-0007-0000

BUILDING CHARACTERISTICS

ELEMENT	CD	CONSTRUCTION
Exterior Wall	10	ABOVE AVG 100
Roof Structur	08	IRREGULAR 100
Roof Cover	03	COMP SHNGL 100
Interior Wall	05	DRYWALL 100
Interior Floo	14	CARPET 70
Interior Floo	12	HARDWOOD 30
Air Condition	03	CENTRAL 100
Heating Type	04	AIR DUCTED 100
Bedrooms		4 100
Bathrooms		4.5 100
Frame	02	WOOD FRAME 100
Stories	2.	2. 100
Units		0 100
Quality	04	Quality Level 04

DOR CODE 0100 SINGLE FAMILY
MAP NUM | MKT AREA 10
NEIGHBORHOOD/LOC 10007.00

AREA TYPE	TOTAL GROSS AREA	PCT OF BASE	YEAR	TOT ADJ AREA	SUBAREA MARKET VALUE
BAS	2,409	100	2000	2,409	459,874
FGR	713	55	2000	392	74,833
FOP	44	30	2000	13	2,482
FOP	217	30	2000	65	12,408
FUS	348	100	2000	348	66,433
FUS	906	100	2000	906	172,954
UOP	32	20	2000	6	1,146
UOP	40	20	2000	8	1,527
UOP	67	20	2000	13	2,482
UOP	98	20	2000	20	3,818
TOTALS	5,014			4,208	803,300

MARKET ADJUSTMENTS

TYPE	MDL	EFF. AREA	TOT ADJ PTS	EFF. BASE RATE	REPL. COST NEW	AYB	EYB	ECON	FNCT		NORM	% COND
0500	11	4,208	130.6800	216.93	912,841	2000	2000	0	0	0	12.00	88.00

1 SFR CUST 100% - 2020 Heated Area: 3663 HX Base Yr 2020

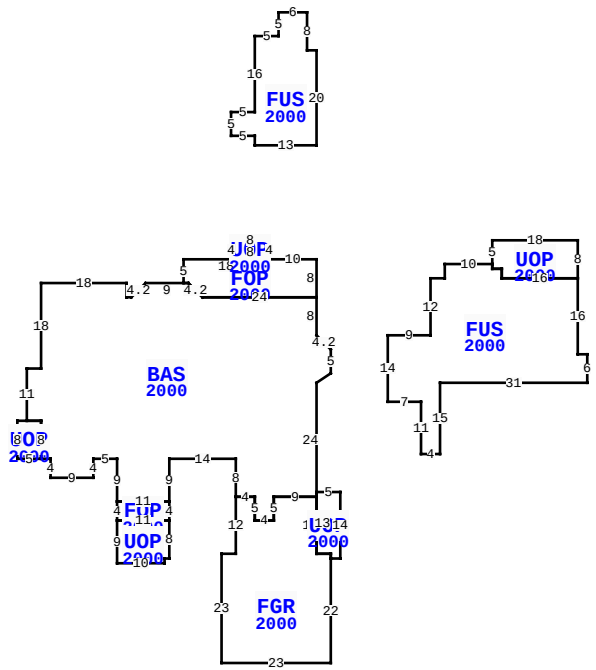

** This building has 11 Sub-Areas

30 LONG POINT DR, FERNANDINA BEACH

BLD DATE		LGL DATE	
XF DATE		LAND DATE	04/23/2026 MLU
INC DATE		AG DATE	

NASSAU COUNTY PROPERTY

PAGE 1 of 1 5

VALUATION SUMMARY

VALUATION BY		STANDARD
Tax Group: 5	Tax Dist:	
BUILDING MARKET VALUE		803,300
TOTAL MARKET OB/XF VALUE		1,620
TOTAL LAND VALUE - MARKET		800,000
TOTAL MARKET VALUE		1,604,920
SOH/AGL Deduction		637,061
ASSESSED VALUE		967,859
TOTAL EXEMPTION VALUE	HX HB	51,411
BASE TAXABLE VALUE		916,448
TOTAL JUST VALUE		1,604,920
NCON VALUE		0
INCOME VALUE		
PREVIOUS YEAR MKT VALUE		1,535,445

PERMIT NUM	DESCRIPTION	AMT	ISSUED
B9906277	NEW CONSTR	323,000	07/01/1999

SALES DATA

OFF RECORD Number	DATE	TYPE INST	Q U	V I	RSN CD	SALE PRICE
2347/0022	3/12/2020	LE	U	I	11	100
GRANTOR: HENDRICKS SCOT R & JI						
GRANTEE: HENDRICKS FAMILY TR						
1899/1135	1/16/2014	WD	Q	I	02	887,500
GRANTOR: HILL VIRGINIA Z TRUST						
GRANTEE: HENDRICKS SCOT R &						

BUILDING NOTES

EXTRA FEATURES

LN	OB/XF CODE	DESCRIPTION	BLD	CAP	L	W	UNITS	UT	Adj R	ADJ UNIT PRICE	ORIG COND	YEAR ON	YEAR ACTUAL	Q	% COND	OB/XF MKT VALUE	NOTES
1	0504	FP-ELECTRI	0	100	0	0	1.00	UT	2,000.00	2,000.00	100	2000	2000	3	81	1,620	

BUILDING DIMENSIONS

BAS=[YR=2000] N8 FOP=[YR=2000] N8 W10 UOP=[YR=2000] N4 W8 S4 E8 $ W18 S5 E1 D3 R3 E24$ W24 U3 L3 W9 D3 L3 W1 N3 W18 S18 W3 S11 UOP=[YR=2000] W2 S8 E5 N8 W3 $ E3 S8 E2 S4 E9 N4 E5 S9 FOP=[YR=2000] S4 UOP=[YR=2000] S9 E10 N1 E1 N8 W11 $ E11 N4 W11 $ E11 N9 E14 S8 FGR=[YR=2000] S12 W3 S23 E23 N22 UOP=[YR=2000] E2N14 W5 S13 E3 S1 $ N1 W3 N12 W9 S5 W4 N5 W4 $ E4 S5 E4 N5 E9 N24 R3 U2 N5 U3 L3 $ PTR= E15 FUS=[YR=2000] E9 N12 E3 N3 E10 UOP=[YR=2000] N5 E18 S8 W16 N2 W2 N1 $ S1 E2 S2 E16 S16 E2 S6 W31 S15 W4 N11 W7 N14 $ W15 $ PTR= N40 FUS=[YR=2000] N20 W2 N8 W6S5 W5 S16 W5 S5 E5 S2 E13$S40 $.

LAND DESCRIPTION

TOTAL OB/XF 1,620

LN	USE CODE	CLS	LAND USE DESCRIPTION	CAP	RD	LOC ZONE	FRONT	DEPTH	TOT LND UTS	UNIT TYPE	DT	DPTH FACT	% COND	TOT ADJ	UNIT PRICE	ADJ UNIT PRICE	LAND VALUE	OTHER ADJUSTMENTS AND NOTES	YEAR	DENSITY	DECL	FRZ	YR	CONSRV
1	000140	C	RES GOLF	100		PUD	0.00	0.00	1.00	LT		1.00	1.00	1.00	800,000.00	800,000.00	800,000							

REVIEW DATE 01/01/2023 BY CD Total Acres: 0.00 Total Land Value: 800,000 Market: 0 Agricultural: 0 Common: 800,000 PRINTED 07/09/2026 BY SYS