LOT 4
IN OR 1415/1629
LONG POINT #1 PB 5/85-89

CARDILE FRANK & BARBARA
24 LONG POINT DR
FERNANDINA BEACH, FL 32034

2026

03-6N-29-00LP-0004-0000

BUILDING CHARACTERISTICS

ELEMENT	CD	CONSTRUCTION
Exterior Wall	16	WD FR STUC 100
Roof Structur	03	GABLE/HIP 100
Roof Cover	03	COMP SHNGL 100
Interior Wall	05	DRYWALL 100
Interior Floo	13	LVT/LAMNT 60
Interior Floo	14	CARPET 40
Air Condition	03	CENTRAL 100
Heating Type	04	AIR DUCTED 100
Bedrooms		4 100
Bathrooms		4 100
Frame	02	WOOD FRAME 100
Stories	2.	2. 100
Units		0 100
Quality	04	Quality Level 04

DOR CODE 0100 SINGLE FAMILY
MAP NUM | MKT AREA 10
NEIGHBORHOOD/LOC 10007.00

AREA TYPE	TOTAL GROSS AREA	PCT OF BASE	YEAR	TOT ADJ AREA	SUBAREA MARKET VALUE
BAS	2,847	100	2007	2,847	533,129
BAS	555	100	2009	555	103,929
FGR	726	55	2007	399	74,716
FOP	113	30	2007	34	6,367
FOP	352	30	2007	106	19,850
FUS	559	100	2009	559	104,678
PTO	12	5	2007	1	187
STR	30	10	2009	3	561
UOP	14	20	2007	3	561
UOP	197	20	2007	39	7,303
TOTALS	5,637			4,592	859,897

MARKET ADJUSTMENTS

TYPE	MDL	EFF. AREA	TOT ADJ PTS	EFF. BASE RATE	REPL. COST NEW	AYB	EYB	ECON	FNCT		NORM	% COND
0500	11	4,592	123.9638	205.78	944,942	2007	2007	0	0	0	9.00	91.00

1 SFR CUST 100% - 2008 Heated Area: 3961 HX Base Yr 2008

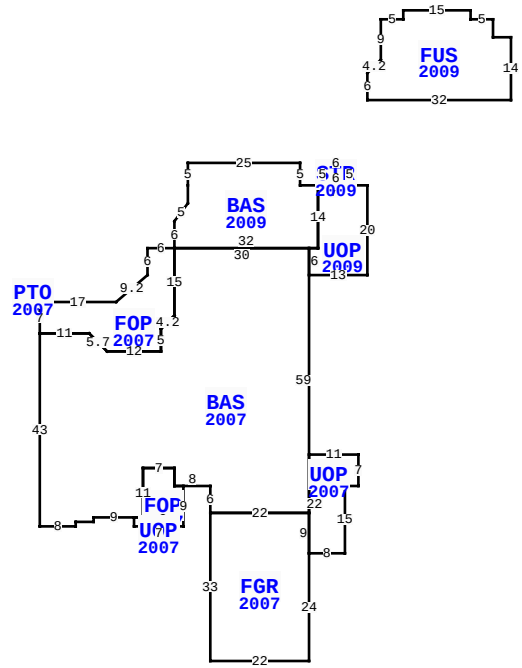

** This building has 11 Sub-Areas

24 LONG POINT DR, FERNANDINA BEACH

BLD DATE	08/10/2007 KK	LGL DATE	
XF DATE		LAND DATE	04/23/2026 MLU
INC DATE		AG DATE	

NASSAU COUNTY PROPERTY

PAGE 1 of 1 5

VALUATION SUMMARY

VALUATION BY		STANDARD
Tax Group: 5	Tax Dist:	
BUILDING MARKET VALUE		859,897
TOTAL MARKET OB/XF VALUE		92,952
TOTAL LAND VALUE - MARKET		800,000
TOTAL MARKET VALUE		1,752,849
SOH/AGL Deduction		799,130
ASSESSED VALUE		953,719
TOTAL EXEMPTION VALUE	HX HB	51,411
BASE TAXABLE VALUE		902,308
TOTAL JUST VALUE		1,752,849
NCON VALUE		0
INCOME VALUE		
PREVIOUS YEAR MKT VALUE		1,644,407

PERMIT NUM	DESCRIPTION	AMT	ISSUED
B1225970	WINDOWS	5,975	04/01/2012
M14448	MECH OTHER	0	04/01/2009
P13674	OTHER	0	02/01/2009
B22161	ADDITION	150,000	12/01/2008
R11700	REPAIR/RRF	3,075	12/01/2008
B19511	REMODEL	0	02/01/2007

SALES DATA

OFF RECORD Number	DATE	TYPE INST	Q / U	V / I	RSN CD	SALE PRICE
1415/1629	5/30/2006	WD	U	V	07	100
GRANTOR: BADENOCH JOSEPH J & P						
GRANTEE: CARDILE FRANK & BAR						
1396/1942	3/17/2006	WD	Q	V		649,000
GRANTOR: BADENOCH JOSEPH & PLA						
GRANTEE: CARDILE FRANK & BAR						

BUILDING NOTES

EXTRA FEATURES

LN	OB/XF CODE	DESCRIPTION	BLD	CAP	L	W	UNITS	UT	Adj R	ADJ UNIT PRICE	ORIG COND	YEAR ON	YEAR ACTUAL	Q	% COND	OB/XF MKT VALUE	NOTES
3	0860	POOL/SPA	0	100	0	0	1.00	UT	100,000.00	100,000.00	100	2007	2007	04	85	85,000	
5	0911	SCRN RM A	0	100	0	0	842.00	SF	18.00	18.00	100	2007	2007	3	24	3,637	
6	0500	FP-PRE FAB	0	100	0	0	1.00	UT	3,500.00	3,500.00	100	2007	2007	3	89	3,115	
7	0600	SUMMER KIT	0	100	0	0	1.00	UT	5,000.00	5,000.00	100	2007	2007	3	24	1,200	

BUILDING DIMENSIONS

BAS=[YR=2007;ORIG=-73,32] S43 E8 N1 E4 N1 E9 E2 N11 E7 S4 E8 S6 E22 N59 W30 S15 D3L3 S5 W12 U4L4 W11 $
FGR=[YR=2007;ORIG=-35,72] S33 E22 N24 N9 W22 $
FUS=[YR=2009;ORIG=0,-20] N6 U3R3 N9 E5 N2 E15 S2 E5 S4 E4 S14 W32 $
BAS=[YR=2009;ORIG=-11,-1] W4 N5 W25 S5 S4 D4L3 S6 E32 N14 $
FOP=[YR=2007;ORIG=-73,25] S7 E11 D4R4 E12 N5 U3R3 N15 W6 S6 D6L7 W17 $
UOP=[YR=2009;ORIG=0,-1] W4 W7 S14 W2 S6 E13 N20 $
UOP=[YR=2007;ORIG=-13,81] E8 N15 E3 N7 W11 S22 $
FOP=[YR=2007;ORIG=-52,73] S2 E2 E9 N9 W2 N4 W7 S11 W2 $
STR=[YR=2009;ORIG=-4,-1] N5 W6 S5 E6 $

LAND DESCRIPTION

TOTAL OB/XF 92,952

LN	USE CODE	CLS	LAND USE DESCRIPTION	CAP	RD	LOC ZONE	FRONT	DEPTH	TOT LND UTS	UNIT TYPE	DT	DPTH FACT	% COND	TOT ADJ	UNIT PRICE	ADJ UNIT PRICE	LAND VALUE	OTHER ADJUSTMENTS AND NOTES	YEAR	DENSITY	DECL	FRZ	YR	CONSRV
1	000140	C	RES GOLF	100		PUD	0.00	0.00	1.00	LT		1.00	1.00	1.00	800,000.00	800,000.00	800,000							

REVIEW DATE 01/01/2023 BY CD Total Acres: 0.00 Total Land Value: 800,000 Market: 0 Agricultural: 0 Common: 800,000 PRINTED 07/09/2026 BY SYS