PT OF SW1/4 OF SE1/4
IN OR 2636/1335

PAGAN EDUARDO & JENNIFER
37265 POWELL LN
HILLIARD, FL 32046

2026

03-3N-24-0000-0006-0100

BUILDING CHARACTERISTICS

ELEMENT	CD	CONSTRUCTION
Exterior Wall	05	AVERAGE 60
Exterior Wall	25	MOD METAL 40
Roof Structur	03	GABLE/HIP 100
Roof Cover	12	MODULAR MT 60
Roof Cover	03	COMP SHNGL 40
Interior Wall	05	DRYWALL 80
Interior Wall	04	PLYWOOD 20
Interior Floo	14	CARPET 70
Interior Floo	08	SHT VINYL 30
Air Condition	03	CENTRAL 100
Heating Type	04	AIR DUCTED 100
Bedrooms		3 100
Bathrooms		2 100
Frame	02	WOOD FRAME 100
Stories	1.	1. 100
Units		0 100
BUD8 Adjustme	04	DIST 01 100
Quality	03	Quality Level 03
DOR CODE	0200	MOBILE HOME
MAP NUM		MKT AREA 09
NEIGHBORHOOD/LOC	9001.00	

AREA TYPE	TOTAL GROSS AREA	PCT OF BASE	YEAR	TOT ADJ AREA	SUBAREA MARKET VALUE
BAS	256	100	1993	256	10,382
BAS	284	100	1993	284	11,518
BAS	672	100	1993	672	27,253
BAS	192	100	2002	192	7,787
FOP	88	30	1993	26	1,055
UCP	672	20	2002	134	5,434
UOP	72	25	2002	18	730
USP	80	50	1993	40	1,622
USP	200	50	1993	100	4,056
USP	80	50	2002	40	1,622
TOTALS	2,706			1,822	73,891

MARKET ADJUSTMENTS

TYPE	MDL	EFF. AREA	TOT ADJ PTS	EFF. BASE RATE	REPL. COST NEW	AYB	EYB	ECON	FNCT		NORM	% COND
0820	02	1,822	113.6000	96.56	175,932	1971	2000	0	0	0	58.00	42.00

1 M/H 93- 100% - 2025 Heated Area: 1404 HX Base Yr 2025

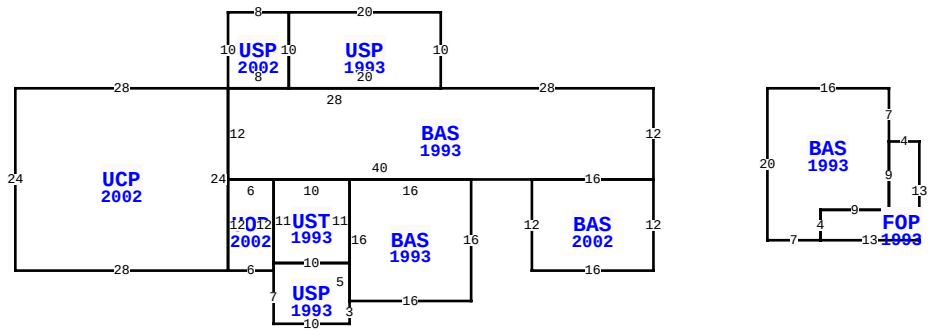

** This building has 11 Sub-Areas

37265 POWELL LN, HILLIARD

BLD DATE		LGL DATE	
XF DATE		LAND DATE	05/12/2026 MLU
INC DATE		AG DATE	

NASSAU COUNTY PROPERTY

PAGE 1 of 1 4

VALUATION SUMMARY

VALUATION BY		STANDARD
Tax Group: 4	Tax Dist:	
BUILDING MARKET VALUE		73,891
TOTAL MARKET OB/XF VALUE		0
TOTAL LAND VALUE - MARKET		68,400
TOTAL MARKET VALUE		142,291
SOH/AGL Deduction		0
ASSESSED VALUE		142,291
TOTAL EXEMPTION VALUE	HX HB	51,411
BASE TAXABLE VALUE		90,880
TOTAL JUST VALUE		142,291
NCON VALUE		0
INCOME VALUE		
PREVIOUS YEAR MKT VALUE		150,641

PERMIT NUM	DESCRIPTION	AMT	ISSUED

SALES DATA

OFF RECORD Number	DATE	TYPE INST	Q / U	V / I	RSN CD	SALE PRICE
2636/1335	5/04/2023	WD	Q	I	01	150,000
GRANTOR: SHANNON RENEE G & TER						
GRANTEE: PAGAN EDUARDO & JEN						
2636/1326	4/03/2023	QC	U	I	11	100
GRANTOR: YOUNG DOYLENE P						
GRANTEE: SHANNON RENEE G & T						

BUILDING NOTES

BUILDING DIMENSIONS

BAS=[YR=1993] W28 USP=[YR=1993] N10 W20 USP 2002= W8 S10 UCP=[YR=2002] W28 S24 E28 N24 $ E8 N10 $ S10 E20 $ W28 S12 UOP=[YR=2002] S12 E6 USP=[YR=1993] S7 E10 N3 BAS=[YR=1993] E16 N16 W16 S16 $ N5 UST=[YR=1993] N11 W10 S11 E10 $ W10 S1 $ N12 W6 $ E40 BAS=[YR=2002] S12 E16 N12 W16 $ E16 N12 $ PTR= E15 BAS=[YR=1993] E16 S7 FOP=[YR=1993] E4 S13 W13 N4 E9 N9 $ S9 W9 S4 W7 N20 $ W15 $.

EXTRA FEATURES

LN	OB/XF CODE	DESCRIPTION	BLD	CAP	L	W	UNITS	UT	Adj R	ADJ UNIT PRICE	ORIG COND	YEAR ON	YEAR ACTUAL	Q	% COND	OB/XF MKT VALUE	NOTES

LAND DESCRIPTION

TOTAL OB/XF 0

LN	USE CODE	CLS	LAND USE DESCRIPTION	CAP	RD	LOC ZONE	FRONT	DEPTH	TOT LND UTS	UNIT TYPE	DT	DPTH FACT	% COND	TOT ADJ	UNIT PRICE	ADJ UNIT PRICE	LAND VALUE	OTHER ADJUSTMENTS AND NOTES	YEAR	DENSITY	DECL	FRZ	YR	CONSRV
1	000100	C	RES	100	0007	OR	0.00	0.00	1.71	AC		1.00	1.00	1.00	40,000.00	40,000.00	68,400							

REVIEW DATE 03/12/2024 BY WWA Total Acres: 1.71 Total Land Value: 68,400 Market: 0 Agricultural: 0 Common: 68,400 PRINTED 07/09/2026 BY SYS