LOT 27
LITTLE DUNES PB 5/340

TYNDALL PROPERTY HOLDINGS LLC
75 5TH ST NW STE 855
ATLANTA, GA 30308

2026

02-6N-29-DCLO-0027-0000

BUILDING CHARACTERISTICS

ELEMENT	CD	CONSTRUCTION
Exterior Wall	10	ABOVE AVG 100
Roof Structur	03	GABLE/HIP 100
Roof Cover	03	COMP SHNGL 100
Interior Wall	05	DRYWALL 100
Interior Floo	12	HARDWOOD 60
Interior Floo	14	CARPET 40
Air Condition	03	CENTRAL 100
Heating Type	04	AIR DUCTED 100
Bedrooms		3 100
Bathrooms		3 100
Frame	02	WOOD FRAME 100
Stories	2.	2. 100
Units		0 100
Quality	05	Quality Level 05

DOR CODE 0100 SINGLE FAMILY
MAP NUM | MKT AREA 10
NEIGHBORHOOD/LOC 10003.010

AREA TYPE	TOTAL GROSS AREA	PCT OF BASE	YEAR	TOT ADJ AREA	SUBAREA MARKET VALUE
BAS	1,210	100	1996	1,210	262,460
FOP	20	30	1996	6	1,301
FOP	112	30	1996	34	7,375
FSP	110	40	1996	44	9,544
FUS	890	100	1996	890	193,049
UDC	273	25	1993	68	14,750
UOP	18	20	1996	4	868
UST	40	45	1993	18	3,904
UST	12	45	1996	5	1,084
TOTALS	2,685			2,279	494,336

MARKET ADJUSTMENTS

TYPE	MDL	EFF. AREA	TOT ADJ PTS	EFF. BASE RATE	REPL. COST NEW	AYB	EYB	ECON	FNCT		NORM	% COND
0500	11	2,279	151.9392	252.22	574,809	1996	1996	0	0	0	14.00	86.00

1 SFR CUST 100% - 2019 Heated Area: 2100 HX Base Yr 2019

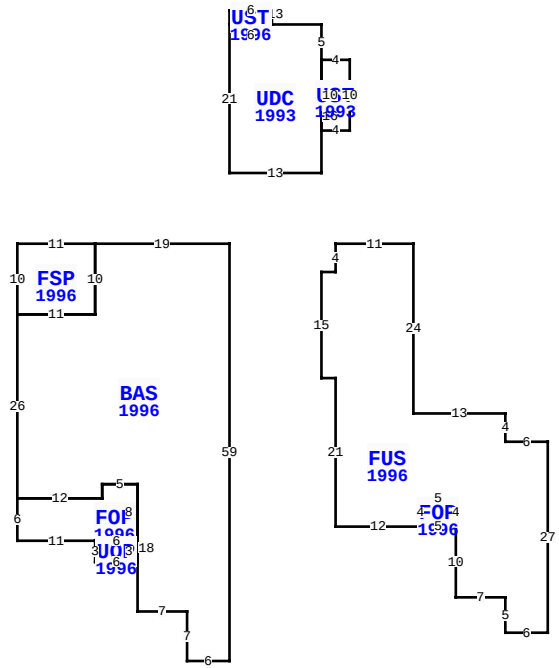

27 LITTLE DUNES CIR, FERNANDINA BEACH

BLD DATE		LGL DATE	
XF DATE		LAND DATE	05/08/2025 MLU
INC DATE		AG DATE	

NASSAU COUNTY PROPERTY

PAGE 1 of 1 5

VALUATION SUMMARY

VALUATION BY		STANDARD
Tax Group: 5	Tax Dist:	
BUILDING MARKET VALUE		494,336
TOTAL MARKET OB/XF VALUE		2,932
TOTAL LAND VALUE - MARKET		550,000
TOTAL MARKET VALUE		1,047,268
SOH/AGL Deduction		416,623
ASSESSED VALUE		630,645
TOTAL EXEMPTION VALUE	HX HB	51,411
BASE TAXABLE VALUE		579,234
TOTAL JUST VALUE		1,047,268
NCON VALUE		0
INCOME VALUE		
PREVIOUS YEAR MKT VALUE		930,619

PERMIT NUM	DESCRIPTION	AMT	ISSUED
B9602967	NEW CONSTR	68,802	05/01/1996

SALES DATA

OFF RECORD Number	DATE	TYPE INST	Q / U	V / I	RSN CD	SALE PRICE
2846/1581	2/12/2026	WD	Q	I	01	1,225,000
GRANTOR: LANIER LAKOTA B						
GRANTEE: TYNDALL PROPERTY HO						
2794/1177	6/12/2025	QC	U	I	11	404,700
GRANTOR: WEBER JOHN W						
GRANTEE: LANIER LAKOTA B						

BUILDING NOTES

BUILDING DIMENSIONS

BAS=[YR=1996] W19 FSP=[YR=1996] W11 S10 E11 N10$ S10 W11 S26 FOP=[YR=1996] S6 E11 UOP=[YR=1996] S3 E6 N3 W6$ E6 N8 W5 S2 W12$ E12 N2 E5 S18 E7 S7 E6 N59$ PTR=E15 FUS=[YR=1996] E11 S24 E13 S4 E6 S27 W6N5 W7 N10 FOP=[YR=1996] W5 N4 E5 S4$ N4 W5 S4 W12 N21 W2 N15 E2 N4$ W15$ PTR=N10 UDC=[YR=1993] N21UST=[YR=1996] N2 E6 S2 W6$ E13 S5 UST=[YR=1993] E4 S10 W4 N10$ S16 W13$ S10$.

EXTRA FEATURES

LN	OB/XF CODE	DESCRIPTION	BLD	CAP	L	W	UNITS	UT	Adj R	ADJ UNIT PRICE	ORIG COND	YEAR ON	YEAR ACTUAL	Q	% COND	OB/XF MKT VALUE	NOTES
1	0504	FP-ELECTRI	0	100	0	0	1.00	UT	2,000.00	2,000.00	100	1996	1996	3	76	1,520	
5	0820	WOOD WALK	0	100	0	0	137.00	SF	11.75	11.75	100	1996	1996	3	40	644	
6	0300	BOAT DCK W	0	100	12	8	96.00	SF	40.00	40.00	100	1996	1996	3	20	768	

LAND DESCRIPTION

TOTAL OB/XF 2,932

LN	USE CODE	CLS	LAND USE DESCRIPTION	CAP	RD	LOC ZONE	FRONT	DEPTH	TOT LND UTS	UNIT TYPE	DT	DPTH FACT	% COND	TOT ADJ	UNIT PRICE	ADJ UNIT PRICE	LAND VALUE	OTHER ADJUSTMENTS AND NOTES	YEAR	DENSITY	DECL	FRZ	YR	CONSRV
1	000140	C	RES GOLF	100		PUD	0.00	0.00	1.00	LT		1.00	1.00	1.00	550,000.00	550,000.00	550,000							

REVIEW DATE 01/01/2023 BY CD Total Acres: 0.00 Total Land Value: 550,000 Market: 0 Agricultural: 0 Common: 550,000 PRINTED 07/09/2026 BY SYS