LOT 9
IN OR 1239/1404
LITTLE DUNES #4 PB 6/146

DAVIS JOSEPH R & MICHELE G
P O BOX 15131
FERNANDINA BEACH, FL 32035

2026

02-6N-29-DCLO-0009-0000

NASSAU COUNTY PROPERTY

BUILDING CHARACTERISTICS

ELEMENT	CD	CONSTRUCTION
Exterior Wall	10	ABOVE AVG 100
Roof Structur	08	IRREGULAR 100
Roof Cover	03	COMP SHNGL 100
Interior Wall	05	DRYWALL 100
Interior Floo	12	HARDWOOD 50
Interior Floo	14	CARPET 50
Air Condition	03	CENTRAL 100
Heating Type	04	AIR DUCTED 100
Bedrooms		3 100
Bathrooms		3 100
Frame	02	WOOD FRAME 100
Stories	2.	2. 100
Units		0 100
Quality	05	Quality Level 05

DOR CODE 0100 SINGLE FAMILY
MAP NUM | MKT AREA 10
NEIGHBORHOOD/LOC 10003.010

AREA TYPE	TOTAL GROSS AREA	PCT OF BASE	YEAR	TOT ADJ AREA	SUBAREA MARKET VALUE
BAS	1,198	100	2000	1,198	261,620
FOP	112	30	2000	34	7,425
FSP	110	40	2000	44	9,609
FUS	910	100	2000	910	198,727
SFB	273	80	2000	218	47,607
UCP	273	20	2000	55	12,011
UOP	6	20	2000	1	218
UOP	8	20	2000	2	436
UOP	20	20	2000	4	874
TOTALS	2,910			2,466	538,527

MARKET ADJUSTMENTS

TYPE	MDL	EFF. AREA	TOT ADJ PTS	EFF. BASE RATE	REPL. COST NEW	AYB	EYB	ECON	FNCT		NORM	% COND
0500	11	2,466	149.4912	248.16	611,963	2000	2000	0	0	0	12.00	88.00

1 SFR CUST 0% - 0 Heated Area: 2326 HX Base Yr

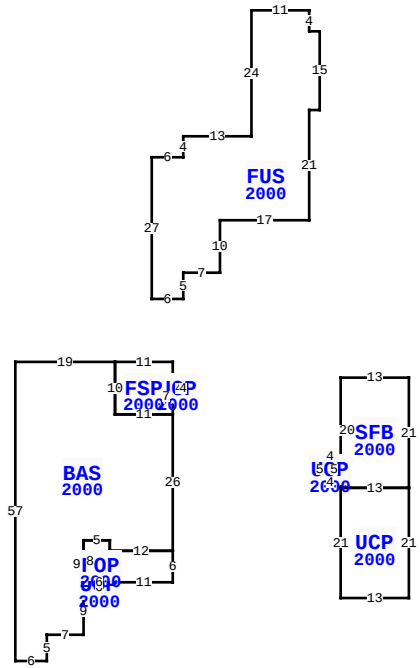

9 LITTLE DUNES CIR, FERNANDINA BEACH

BLD DATE		LGL DATE	
XF DATE		LAND DATE	04/23/2026 MLU
INC DATE		AG DATE	

VALUATION SUMMARY

VALUATION BY	STANDARD
Tax Group: 5	Tax Dist:
BUILDING MARKET VALUE	538,527
TOTAL MARKET OB/XF VALUE	1,620
TOTAL LAND VALUE - MARKET	550,000
TOTAL MARKET VALUE	1,090,147
SOH/AGL Deduction	239,802
ASSESSED VALUE	850,345
TOTAL EXEMPTION VALUE	0
BASE TAXABLE VALUE	850,345
TOTAL JUST VALUE	1,090,147
NCON VALUE	0
INCOME VALUE	
PREVIOUS YEAR MKT VALUE	975,583

PERMIT NUM	DESCRIPTION	AMT	ISSUED
B9906438	NEW CONSTR	150,000	09/01/1999

SALES DATA

OFF RECORD Number	DATE	TYPE INST	Q U	V I	RSN CD	SALE PRICE
1239/1404	6/22/2004	WD	Q	I		670,000
GRANTOR: YELK CYRIL A & DORA J						
GRANTEE: DAVIS JOSEPH R & MI						
0892/1310	7/26/1999	WD	Q	V		67,100
GRANTOR: DUNES CLUB CO II						
GRANTEE: YELK CYRIL A & DORA						

BUILDING NOTES

BUILDING DIMENSIONS

UOP=[YR=2000] W2 FSP=[YR=2000] N3 W11 BAS=[YR=2000] W19 S57 E6 N5 E7 N9 UOP=[YR=2000] E6 N1 FOP=[YR=2000] E11 N6 W12 N2 W5 S8 E6 $ W6 S1 $ N9 E5 S2 E12 N26 W11 N10 $ S10 E11 N7 $ S4 E2 N4 $ PTR= E30 SFB=[YR=2000] E13 S21 UCP=[YR=2000] S21 W13 N21 E13 $ W13 N1 UOP=[YR=2000] N5 W4 S5 E4 $ N20 $ W30 $ PTR= N15 FUS=[YR=2000] N5 E7 N10 E17 N21 E2 N15 W2 N4 W11 S24 W13 S4 W6 S27 E6 $ S15 $.

EXTRA FEATURES

LN	OB/XF CODE	DESCRIPTION	BLD	CAP	L	W	UNITS	UT	Adj R	ADJ UNIT PRICE	ORIG COND	YEAR ON	YEAR ACTUAL	Q	% COND	OB/XF MKT VALUE	NOTES
1	0504	FP-ELECTRI	0	0	0	0	1.00	UT	2,000.00	2,000.00	100	2000	2000	3	81	1,620	

LAND DESCRIPTION

TOTAL OB/XF 1,620

LN	USE CODE	CLS	LAND USE DESCRIPTION	CAP	RD	LOC ZONE	FRONT	DEPTH	TOT LND UTS	UNIT TYPE	DT	DPTH FACT	% COND	TOT ADJ	UNIT PRICE	ADJ UNIT PRICE	LAND VALUE	OTHER ADJUSTMENTS AND NOTES	YEAR	DENSITY	DECL	FRZ	YR	CONSRV
1	000140	C	RES GOLF	0		PUD	0.00	0.00	1.00	LT		1.00	1.00	1.00	550,000.00	550,000.00	550,000							

REVIEW DATE 01/01/2023 BY CD Total Acres: 0.00 Total Land Value: 550,000 Market: 0 Agricultural: 0 Common: 550,000 PRINTED 07/09/2026 BY SYS