LOT 4
LITTLE DUNES PHASE #2 PB 5/365

CRANSHAW DAVID W & JANE F
2396 HANOVER WEST LANE NW
ATLANTA, GA 30327

2026

02-6N-29-DCLO-0004-0000

BUILDING CHARACTERISTICS

ELEMENT	CD	CONSTRUCTION
Exterior Wall	10	ABOVE AVG 100
Roof Structur	03	GABLE/HIP 100
Roof Cover	03	COMP SHNGL 100
Interior Wall	05	DRYWALL 100
Interior Floo	12	HARDWOOD 60
Interior Floo	14	CARPET 40
Air Condition	03	CENTRAL 100
Heating Type	04	AIR DUCTED 100
Bedrooms		3 100
Bathrooms		3 100
Frame	02	WOOD FRAME 100
Stories	2.	2. 100
Units		0 100
Quality	05	Quality Level 05
DOR CODE	0100	SINGLE FAMILY
MAP NUM		MKT AREA 10
NEIGHBORHOOD/LOC	10003.010	

AREA TYPE	TOTAL GROSS AREA	PCT OF BASE	YEAR	TOT ADJ AREA	SUBAREA MARKET VALUE
BAS	1,177	100	1996	1,177	255,302
FOP	132	30	1996	40	8,677
FSP	110	40	1996	44	9,544
FUS	898	100	1996	898	194,785
UDC	273	25	1995	68	14,750
UST	21	45	1995	9	1,952
UST	40	45	1995	18	3,904
TOTALS	2,651			2,254	488,913

MARKET ADJUSTMENTS

TYPE	MDL	EFF. AREA	TOT ADJ PTS	EFF. BASE RATE	REPL. COST NEW	AYB	EYB	ECON	FNCT		NORM	% COND
0500	11	2,254	151.9392	252.22	568,504	1996	1996	0	0	0	14.00	86.00

1 SFR CUST 0% - 0 Heated Area: 2075 HX Base Yr

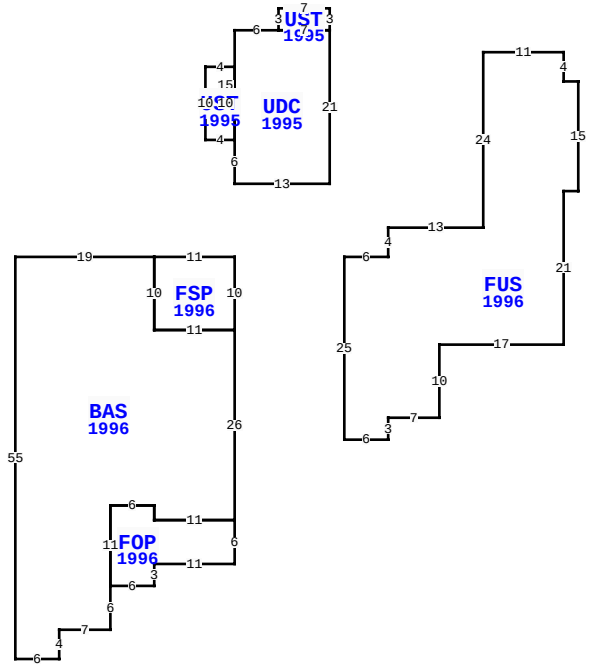

4 LITTLE DUNES CIR, FERNANDINA BEACH

BLD DATE		LGL DATE	
XF DATE		LAND DATE	04/23/2026 MLU
INC DATE		AG DATE	

NASSAU COUNTY PROPERTY

PAGE 1 of 1 5

VALUATION SUMMARY

VALUATION BY	STANDARD
Tax Group: 5	Tax Dist:
BUILDING MARKET VALUE	488,913
TOTAL MARKET OB/XF VALUE	1,737
TOTAL LAND VALUE - MARKET	550,000
TOTAL MARKET VALUE	1,040,650
SOH/AGL Deduction	237,690
ASSESSED VALUE	802,960
TOTAL EXEMPTION VALUE	0
BASE TAXABLE VALUE	802,960
TOTAL JUST VALUE	1,040,650
NCON VALUE	0
INCOME VALUE	
PREVIOUS YEAR MKT VALUE	924,594

PERMIT NUM	DESCRIPTION	AMT	ISSUED
B9502398	NEW CONSTR	70,000	11/01/1995
B9502396	GARAGE	5,520	11/01/1995

SALES DATA

OFF RECORD Number	DATE	TYPE INST	Q U	V I	RSN CD	SALE PRICE
2351/1774	4/03/2020	WD	Q	I	02	665,000
GRANTOR: CASOLA GIOVANNI & SHI						
GRANTEE: CRANSHAW DAVID W &						
1870/1046	7/31/2013	WD	Q	I	02	665,000
GRANTOR: GAVRON RUSSELL JR & S						
GRANTEE: CASOLA GIOVANNI & S						

BUILDING NOTES

BUILDING DIMENSIONS

FSP=[YR=1996] W11 BAS=[YR=1996] W19 S55 E6 N4 E7 N6
FOP=[YR=1996] E6 N3 E11 N6 W11 N2 W6 S11$ N11 E6 S2 E11 N26
W11 N10$ S10 E11 N10$ PTR= E15 FUS=[YR=1996] E6 N4 E13 N24
E11 S4 E2 S15 W2 S21 W17 S10 W7 S3 W6 N25$ W15$ PTR=N10
UDC=[YR=1995] N6 UST=[YR=1995] W4 N10 E4 S10$ N15 E6
UST=[YR=1995] N3 E7 S3 W7$ E7 S21 W13$ S10$.

EXTRA FEATURES

LN	OB/XF CODE	DESCRIPTION	BLD	CAP	L	W	UNITS	UT	Adj R	ADJ UNIT PRICE	ORIG COND	YEAR ON	YEAR ACTUAL	Q	% COND	OB/XF MKT VALUE	NOTES
1	0504	FP-ELECTRI	0	0	0	0	1.00	UT	2,000.00	2,000.00	100	1996	1996	3	76	1,520	
4	1075	TRELLIS G	0	0	5	5	25.00	SF	35.00	35.00	100	1996	1996	3	20	175	
6	0820	WOOD WALK	0	0	3	3	9.00	SF	11.75	11.75	100	1996	1996	3	40	42	

LAND DESCRIPTION

TOTAL OB/XF 1,737

LN	USE CODE	CLS	LAND USE DESCRIPTION	CAP	RD	LOC ZONE	FRONT	DEPTH	TOT LND UTS	UNIT TYPE	DT	DPTH FACT	% COND	TOT ADJ	UNIT PRICE	ADJ UNIT PRICE	LAND VALUE	OTHER ADJUSTMENTS AND NOTES	YEAR	DENSITY	DECL	FRZ	YR	CONSRV
1	000100	C	RES	0		PUD	0.00	0.00	1.00	LT		1.00	1.00	1.00	550,000.00	550,000.00	550,000							

REVIEW DATE 01/01/2023 BY CD Total Acres: 0.00 Total Land Value: 550,000 Market: 0 Agricultural: 0 Common: 550,000 PRINTED 07/09/2026 BY SYS