PT OF SEC'S 2 & 3-2N-25
IN OR 1884/1543

DAVIS DANIEL CHES & ASHLEE FAITH
56977 DAVIS RD
CALLAHAN, FL 32011-0082

2026

02-2N-25-0000-0003-0030

NASSAU COUNTY PROPERTY

BUILDING CHARACTERISTICS

ELEMENT	CD	CONSTRUCTION
Exterior Wall	20	FACE BRICK 100
Roof Structur	08	IRREGULAR 100
Roof Cover	03	COMP SHNGL 100
Interior Wall	05	DRYWALL 100
Interior Floo	11	CLAY TILE 60
Interior Floo	14	CARPET 40
Air Condition	03	CENTRAL 100
Heating Type	04	AIR DUCTED 100
Bedrooms		3 100
Bathrooms		3 100
Frame	02	WOOD FRAME 100
Stories	2.	2. 100
Units		0 100
Occupancy	00	NONE 100
Quality	06	Quality Level 06
DOR CODE	5000	IMPROVED AG
MAP NUM		MKT AREA 08
NEIGHBORHOOD/LOC	8026.00	

AREA TYPE	TOTAL GROSS AREA	PCT OF BASE	YEAR	TOT ADJ AREA	SUBAREA MARKET VALUE
BAS	2,532	100	2015	2,532	381,504
DCK	64	10	2015	6	904
FGR	688	55	2015	378	56,954
FOP	220	30	2015	66	9,945
FOP	279	30	2015	84	12,657
FST	90	55	2015	50	7,534
FUS	1,183	100	2015	1,183	178,247
STP	20	10	2015	2	302
STP	28	10	2015	3	452
STR	60	10	2015	6	904
TOTALS	5,164			4,310	649,402

MARKET ADJUSTMENTS

TYPE	MDL	EFF. AREA	TOT ADJ PTS	EFF. BASE RATE	REPL. COST NEW	AYB	EYB	ECON	FNCT		NORM	% COND
0900	01	4,310	117.1896	162.89	702,056	2015	2015	0	0	0	7.50	92.50

1 SNGL FAM 100% - 2016 Heated Area: 3715 HX Base Yr 2016

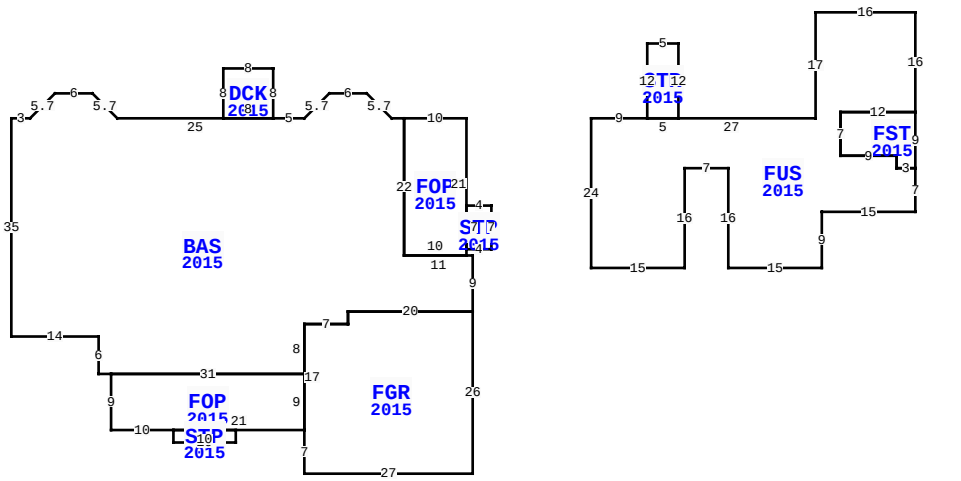

56977 DAVIS RD, CALLAHAN

BLD DATE		LGL DATE	
XF DATE		LAND DATE	05/07/2026 MLU
INC DATE		AG DATE	02/26/2025 KBA

VALUATION SUMMARY

VALUATION BY	STANDARD
Tax Group: 6	Tax Dist:
BUILDING MARKET VALUE	649,402
TOTAL MARKET OB/XF VALUE	0
TOTAL LAND VALUE - MARKET	304,008
TOTAL MARKET VALUE	740,280
SOH/AGL Deduction	378,331
ASSESSED VALUE	361,949
TOTAL EXEMPTION VALUE	HX HB 51,411
BASE TAXABLE VALUE	310,538
TOTAL JUST VALUE	953,410
NCON VALUE	0
INCOME VALUE	
PREVIOUS YEAR MKT VALUE	971,100

PERMIT NUM	DESCRIPTION	AMT	ISSUED
B1429084	CO ISSUED	0	08/28/2015
B1429084	NEW CONSTR	507,602	07/01/2014

SALES DATA

OFF RECORD Number	DATE	TYPE INST	Q / U	V / I	RSN CD	SALE PRICE
1884/1543	10/09/2013	TD	U	V	11	100

GRANTOR: DAVIS KERRY L & CECIL

GRANTEE: DAVIS DANIEL CHES &

BUILDING NOTES

BUILDING DIMENSIONS

FOP=[YR=2015] W10 BAS=[YR=2015] W2 U4 L4 W6 D4 L4 W5 DCK=[YR=2015] N8 W8 S8 E8$ W25 U4 L4 W6 L4 D4 W3 S35 E14 S6 E2 FOP=[YR=2015] S9 E10 STP=[YR=2015] S2 E10 N2 W10$ E21 FGR=[YR=2015] S7 E27 N26 W20 S2 W7 S17$ N9 W31$ E31 N8 E7 N2 E20 N9 W11 N22$ S22 E10 N1 STP=[YR=2015] E4 N7 W4 S7$ N21$ PTR= E20 FUS=[YR=2015] E9 STR=[YR=2015] N12 E5 S12 W5$ E27 N17 E16 S16 FST=[YR=2015] S9 W3 N2 W9 N7 E12$ W12 S7 E9 S2 E3 S7 W15 S9 W15 N16 W7 S16 W15 N24$W20$.

EXTRA FEATURES

LN	OB/XF CODE	DESCRIPTION	BLD	CAP	L	W	UNITS	UT	Adj R	ADJ UNIT PRICE	ORIG COND	YEAR ON	YEAR ACTUAL	Q	% COND	OB/XF MKT VALUE	NOTES

LAND DESCRIPTION

TOTAL OB/XF 0

LN	USE CODE	CLS	LAND USE DESCRIPTION	CAP	RD	LOC ZONE	FRONT	DEPTH	TOT LND UTS	UNIT TYPE	DT	DPTH FACT	% COND	TOT ADJ	UNIT PRICE	ADJ UNIT PRICE	LAND VALUE	OTHER ADJUSTMENTS AND NOTES	YEAR	DENSITY	DECL	FRZ	YR	CONSRV
1	005000	C	AGRICULTURAL	100		OR	0.00	0.00	5.48	AC		1.00	1.00	1.00	14,600.00	14,600.00	80,008							
2	009530	C	POND	100					2.00	AC		1.00	1.00	1.00	2,500.00	2,500.00	5,000							
3	006005	A	PASTURE - GR	0		OR	0.00	0.00	13.00	AC		1.00	1.00	1.00	370.00	370.00	4,810							
4	005500	A	TIMBER 2 N S	0		OR	0.00	0.00	2.00	AC		1.00	1.00	1.00	530.00	530.00	1,060							
5	009910	M	MARKET VALUE	0		OR	0.00	0.00	15.00	AC		1.00	1.00	1.00	14,600.00	14,600.00	219,000							

REVIEW DATE 01/01/2023 BY CD Total Acres: 22.48 Total Land Value: 90,878 Market: 219,000 Agricultural: 5,870 Common: 85,008 PRINTED 07/09/2026 BY SYS