IN OR 878/369
PARCELS 4-11 & 4-13

PINKSTAFF DAVID N & TERESA A
PO BOX 368
CALLAHAN, FL 32011-0368

2026

02-2N-24-0000-0004-0110

NASSAU COUNTY PROPERTY

BUILDING CHARACTERISTICS

ELEMENT	CD	CONSTRUCTION
Exterior Wall	20	FACE BRICK 100
Roof Structur	03	GABLE/HIP 100
Roof Cover	03	COMP SHNGL 100
Interior Wall	05	DRYWALL 100
Interior Floo	12	HARDWOOD 80
Interior Floo	11	CLAY TILE 20
Air Condition	03	CENTRAL 100
Heating Type	04	AIR DUCTED 100
Bedrooms		3 100
Bathrooms		3.5 100
Frame	02	WOOD FRAME 100
Stories	2.	2. 100
Units		0 100
Occupancy	00	NONE 100
Quality	01	Quality Level 01
DOR CODE	0100	SINGLE FAMILY
MAP NUM		MKT AREA 08
NEIGHBORHOOD/LOC	8001.00	

AREA TYPE	TOTAL GROSS AREA	PCT OF BASE	YEAR	TOT ADJ AREA	SUBAREA MARKET VALUE
BAS	1,856	100	1996	1,856	194,901
FGR	675	55	1996	371	38,959
FOP	144	30	1996	43	4,516
FOP	310	30	1996	93	9,766
FSP	352	40	1996	141	14,806
FUS	720	100	1996	720	75,608
PTO	180	5	1996	9	945
TOTALS	4,237			3,233	339,502

MARKET ADJUSTMENTS

TYPE	MDL	EFF. AREA	TOT ADJ PTS	EFF. BASE RATE	REPL. COST NEW	AYB	EYB	ECON	FNCT		NORM	% COND
0900	01	3,233	96.5448	134.20	433,869	1996	1996	0	0	0	21.75	78.25

1 SNGL FAM 100% - 2000 Heated Area: 2576 HX Base Yr 2000

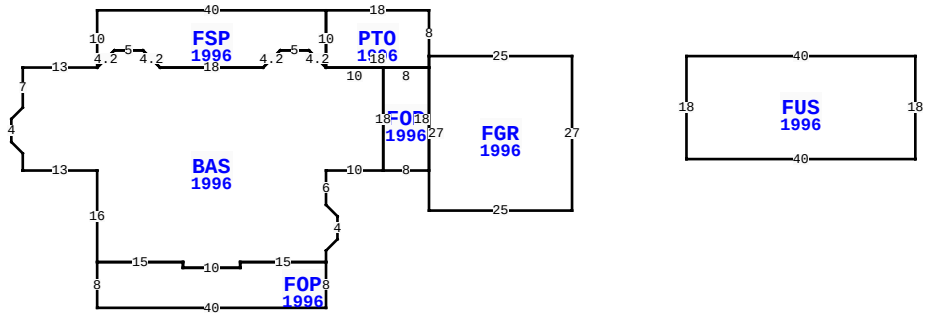

36108 JENTRIE RAY LN, CALLAHAN

BLD DATE		LGL DATE	
XF DATE		LAND DATE	05/08/2026 MLU
INC DATE		AG DATE	

VALUATION SUMMARY

VALUATION BY		STANDARD
Tax Group: 6	Tax Dist:	
BUILDING MARKET VALUE		339,502
TOTAL MARKET OB/XF VALUE		0
TOTAL LAND VALUE - MARKET		105,000
TOTAL MARKET VALUE		444,502
SOH/AGL Deduction		208,098
ASSESSED VALUE		236,404
TOTAL EXEMPTION VALUE	HX HB	51,411
BASE TAXABLE VALUE		184,993
TOTAL JUST VALUE		444,502
NCON VALUE		0
INCOME VALUE		
PREVIOUS YEAR MKT VALUE		452,816

PERMIT NUM	DESCRIPTION	AMT	ISSUED
22003145	REPAIR/RRF	40,000	02/25/2022
E16342	ELEC OTHER	750	12/01/2005
952083	NEW CONSTR	150,000	07/01/1995

SALES DATA

OFF RECORD Number	DATE	TYPE INST	Q / U	V / I	RSN CD	SALE PRICE
0878/0369	4/09/1999	WD	Q	I		205,000
GRANTOR: SHAFFER JANET H						
GRANTEE: PINKSTAFF DAVID & T						
0843/1827	8/06/1998	WD	Q	I	06	143,300
GRANTOR: SHAFFER JIMMY R						
GRANTEE: SHAFFER JANET H						

BUILDING NOTES

BUILDING DIMENSIONS

FGR=[YR=1996] W25 PTO=[YR=1996] N8 W18 FSP=[YR=1996] W40 S10 BAS=[YR=1996] W13 S7 D2 L2 S4 D2 R2 S3 E13 S16 FOP=[YR=1996] S8 E40 N8 W15 S1 W10 N1 W15$ E15 S1 E10 N1 E15 N2 R2 U2 N4 L2 U2 N6 E10 FOP=[YR=1996] E8 N18 W8 S18$ N18 W10 U3 L3 W5 D3 L3 W18 U3 L3 W5 D3 L3 $ U3 R3 E5 D3 R3 E18 U3 R3 E5 D3 R3 N10$ S10 E18 N2$ S27 E25 N27$ PTR=E20 FUS=[YR=1996] E40 S18 W40 N18$ W20$.

EXTRA FEATURES

L N	OB/XF CODE	DESCRIPTION	BLD	CAP	L	W	UNITS	UT	Adj R	ADJ UNIT PRICE	ORIG COND	YEAR ON	YEAR ACTUAL	Q	% COND	OB/XF MKT VALUE	NOTES

LAND DESCRIPTION

TOTAL OB/XF 0

L N	USE CODE	CLS	LAND USE DESCRIPTION	CAP	R D	LOC ZONE	FRONT	DEPTH	TOT LND UTS	UNIT TYPE	D T	DPTH FACT	% COND	TOT ADJ	UNIT PRICE	ADJ UNIT PRICE	LAND VALUE	OTHER ADJUSTMENTS AND NOTES	YEAR	DENSITY	DECL	FRZ	YR	CONSRV
1	000100	C	RES	100	0007	OR	0.00	0.00	5.00	AC		1.00	1.00	1.00	21,000.00	21,000.00	105,000							

REVIEW DATE 01/01/2023 BY CD Total Acres: 5.00 Total Land Value: 105,000 Market: 0 Agricultural: 0 Common: 105,000 PRINTED 07/09/2026 BY SYS