LOT 21
IN OR 2110/218
SWEETWATER OAKS PB 5/75 & 76

WAGES BARBARA W & THOMAS A
12 MOSS OAKS DR
FERNANDINA BEACH, FL 32034

2026

01-6N-29-2000-0021-0000

BUILDING CHARACTERISTICS

ELEMENT	CD	CONSTRUCTION
Exterior Wall	10	ABOVE AVG 100
Roof Structur	08	IRREGULAR 100
Roof Cover	03	COMP SHNGL 100
Interior Wall	05	DRYWALL 100
Interior Floo	14	CARPET 70
Interior Floo	12	HARDWOOD 30
Air Condition	03	CENTRAL 100
Heating Type	04	AIR DUCTED 100
Bedrooms		3 100
Bathrooms		2.5 100
Frame	02	WOOD FRAME 100
Stories	1.	1. 100
Units		0 100
Occupancy	00	NONE 100
Quality	04	Quality Level 04
DOR CODE	0100	SINGLE FAMILY
MAP NUM		MKT AREA 10
NEIGHBORHOOD/LOC	10001.00	

AREA TYPE	TOTAL GROSS AREA	PCT OF BASE	YEAR	TOT ADJ AREA	SUBAREA MARKET VALUE
BAS	2,538	100	2000	2,538	395,743
FGR	489	55	2000	269	41,944
FOP	35	30	2000	10	1,559
FOP	140	30	2000	42	6,549
FSP	324	40	2014	130	20,271
PTO	77	5	2000	4	624
PTO	251	5	2000	13	2,027
PTO	136	5	2014	7	1,091
UOP	63	20	2000	13	2,027
TOTALS	4,053			3,026	471,836

MARKET ADJUSTMENTS

TYPE	MDL	EFF. AREA	TOT ADJ PTS	EFF. BASE RATE	REPL. COST NEW	AYB	EYB	ECON	FNCT		NORM	% COND
0500	01	3,026	106.7430	177.19	536,177	2000	2000	0	0	0	12.00	88.00

1 SFR CUST 100% - 2014 Heated Area: 2538 HX Base Yr 2014

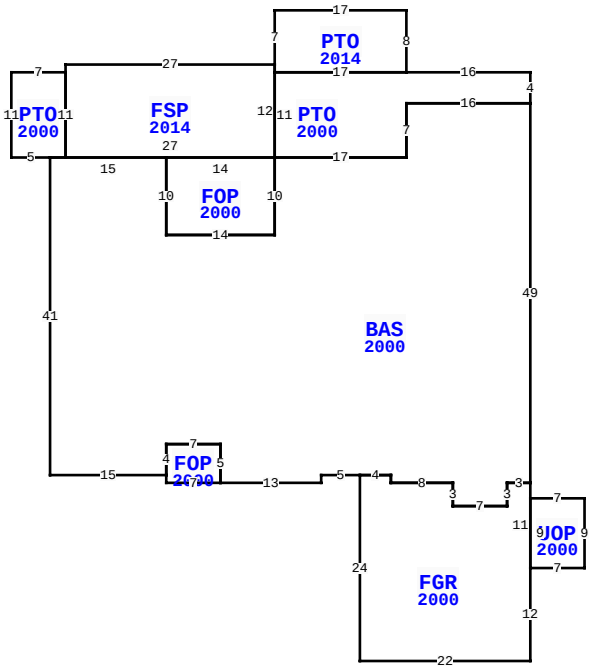

12 MOSS OAKS DR, FERNANDINA BEACH

BLD DATE		LGL DATE	
XF DATE		LAND DATE	
INC DATE		AG DATE	

NASSAU COUNTY PROPERTY

PAGE 1 of 1 5

VALUATION SUMMARY

VALUATION BY		STANDARD
Tax Group: 5	Tax Dist:	
BUILDING MARKET VALUE		471,836
TOTAL MARKET OB/XF VALUE		0
TOTAL LAND VALUE - MARKET		450,000
TOTAL MARKET VALUE		921,836
SOH/AGL Deduction		403,061
ASSESSED VALUE		518,775
TOTAL EXEMPTION VALUE	HX HB	51,411
BASE TAXABLE VALUE		467,364
TOTAL JUST VALUE		921,836
NCON VALUE		0
INCOME VALUE		
PREVIOUS YEAR MKT VALUE		862,353

PERMIT NUM	DESCRIPTION	AMT	ISSUED
B1428469	SCRN PRCH	7,009	03/01/2014
B9906507	NEW CONSTR	194,000	10/01/1999

SALES DATA

OFF RECORD Number	DATE	TYPE INST	Q U	V I	RSN CD	SALE PRICE
2110/0218	3/15/2017	SW	U	I	11	100
GRANTOR: WAGES BARBARA W						
GRANTEE: WAGES BARBARA W & T						
1860/1704	5/22/2013	SW	Q	I	02	455,000
GRANTOR: SUNTRUST MORTGAGE INC						
GRANTEE: WAGES BARBARA W						

BUILDING NOTES

BUILDING DIMENSIONS

PTO=[YR=2000] W16 PTO=[YR=2014] N8 W17 S7 FSP=[YR=2014] W27 S1 PTO=[YR=2000] W7 S11 E5 BAS=[YR=2000] S41 E15 FOP=[YR=2000] S1 E7 N5 W7 S4$ N4E7 S5 E13 N1 E5 FGR=[YR=2000] S24 E22 N12 UOP=[YR=2000] E7 N9 W7 S9$ N11 W3 S3 W7 N3 W8 N1 W4$ E4 S1 E8 S3 E7 N3 E3 N49 W16 S7 W17 FOP=[YR=2000] W14 S10 E14 N10$ S10 W14 N10 W15$ E2 N11$ S11 E27 N12$ S1 E17$ W17 S11 E17 N7 E16 N4$.

EXTRA FEATURES

L N	OB/XF CODE	DESCRIPTION	BLD	CAP	L	W	UNITS	UT	Adj R	ADJ UNIT PRICE	ORIG COND	YEAR ON	YEAR ACTUAL	Q	% COND	OB/XF MKT VALUE	NOTES

LAND DESCRIPTION

TOTAL OB/XF 0

L N	USE CODE	CLS	LAND USE DESCRIPTION	CAP	R D	LOC ZONE	FRONT	DEPTH	TOT LND UTS	UNIT TYPE	D T	DPTH FACT	% COND	TOT ADJ	UNIT PRICE	ADJ UNIT PRICE	LAND VALUE	OTHER ADJUSTMENTS AND NOTES	YEAR	DENSITY	DECL	FRZ	YR	CONSRV
1	000100	C	RES	100		RSF-1	0.00	0.00	1.00	UT		1.00	1.00	1.00	450,000.00	450,000.00	450,000							

REVIEW DATE 01/01/2023 BY CD Total Acres: 0.00 Total Land Value: 450,000 Market: 0 Agricultural: 0 Common: 450,000 PRINTED 07/09/2026 BY SYS