LOT 63 IN OR 744 PG 742
SEA MARSH VILLAGE UNIT 1
PB 4 PG 11

FEAZELL VIRGINIA S
8 SEAMARSH ROAD
FERNANDINA BEACH, FL 32034

2026

01-6N-29-1900-0063-0000

NASSAU COUNTY PROPERTY

BUILDING CHARACTERISTICS

ELEMENT	CD	CONSTRUCTION
Exterior Wall	12	CEDAR 100
Roof Structur	03	GABLE/HIP 100
Roof Cover	03	COMP SHNGL 100
Interior Wall	05	DRYWALL 70
Interior Wall	06	CUST PANEL 30
Interior Floo	14	CARPET 70
Interior Floo	11	CLAY TILE 30
Air Condition	03	CENTRAL 100
Heating Type	04	AIR DUCTED 100
Bedrooms		4 100
Bathrooms		4 100
Frame	02	WOOD FRAME 100
Stories	1.	1. 100
Units		0 100
BUD8 Adjustme	05	DIST 1A 100
Occupancy	00	NONE 100
Quality	04	Quality Level 04
DOR CODE	0100	SINGLE FAMILY
MAP NUM		MKT AREA 10
NEIGHBORHOOD/LOC	10001.00	

AREA TYPE	TOTAL GROSS AREA	PCT OF BASE	YEAR	TOT ADJ AREA	SUBAREA MARKET VALUE
BAS	1,218	100	1993	1,218	191,012
BAS	2,265	100	1998	2,265	355,208
BAS	192	100	2002	192	30,111
DCK	496	10	1998	50	7,841
DCK	184	10	2002	18	2,822
FDG	626	60	1993	376	58,966
FOP	219	30	1998	66	10,351
SFB	24	80	1993	19	2,980
SFB	156	80	1998	125	19,603
UOP	143	20	1998	29	4,548
TOTALS	5,523			4,358	683,441

MARKET ADJUSTMENTS

TYPE	MDL	EFF. AREA	TOT ADJ PTS	EFF. BASE RATE	REPL. COST NEW	AYB	EYB	ECON	FNCT		NORM	% COND
0500	01	4,358	109.2168	181.30	790,105	1977	1998	0	0	0	13.50	86.50

1 SFR CUST 100% - 2002 Heated Area: 3819 HX Base Yr 2002

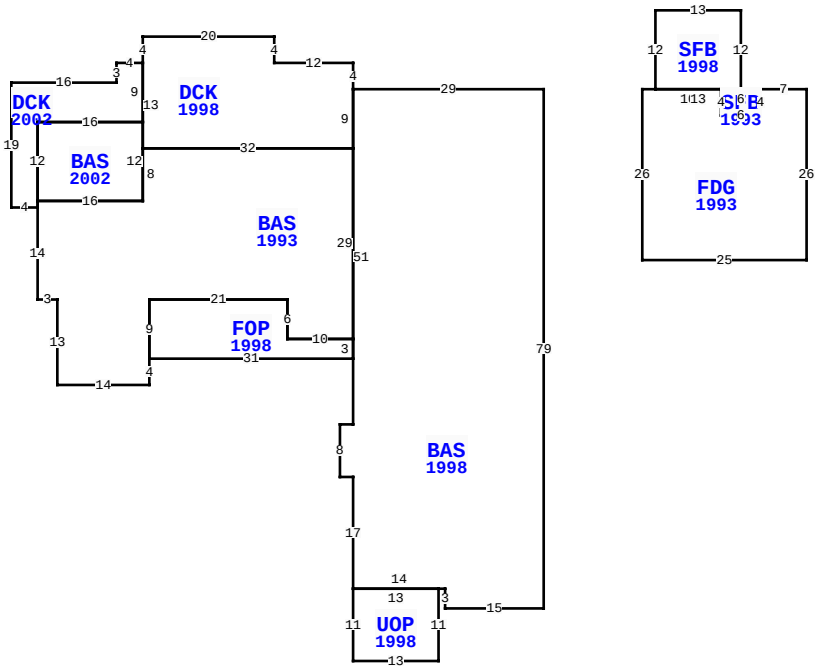

8 SEA MARSH RD, FERNANDINA BEACH

BLD DATE		LGL DATE	
XF DATE		LAND DATE	05/07/2025 MLU
INC DATE		AG DATE	

VALUATION SUMMARY

VALUATION BY		STANDARD
Tax Group: 5	Tax Dist:	
BUILDING MARKET VALUE		683,441
TOTAL MARKET OB/XF VALUE		53,220
TOTAL LAND VALUE - MARKET		1,000,000
TOTAL MARKET VALUE		1,736,661
SOH/AGL Deduction		775,061
ASSESSED VALUE		961,600
TOTAL EXEMPTION VALUE	HX HB	51,411
BASE TAXABLE VALUE		910,189
TOTAL JUST VALUE		1,736,661
NCON VALUE		0
INCOME VALUE		
PREVIOUS YEAR MKT VALUE		1,523,796

PERMIT NUM	DESCRIPTION	AMT	ISSUED
B24728	REMODEL	6,000	05/01/2011
B24094	REMODEL	24,212	11/01/2010
B9906323	XFOB	22,000	08/01/1999
P982839	NEW CONSTR	0	06/01/1998
B9804819	ADDITION	100,000	04/01/1997
R980872	REPAIR/RRF	0	04/01/1997

SALES DATA

OFF RECORD Number	DATE	TYPE INST	Q / U	V / I	RSN CD	SALE PRICE
0744/0742	11/16/1995	WD	Q	I		400,000
GRANTOR: GILLILAND ROBERTSON H						
GRANTEE: FEAZELL THOMAS L &						
0196/0549	1/01/1975	WD	Q	V		27,600
GRANTOR:						
GRANTEE:						

BUILDING NOTES

BUILDING DIMENSIONS

BAS=[YR=1998] W29 DCK=[YR=1998] N4 W12 N4 W20 S4 DCK=[YR=2002] W4 S3 W16 S19 E4 BAS=[YR=1993] S14 E3 S13 E14 N4 FOP=[YR=1998] E31 N3 W10 N6 W21 S9 $ N9 E21 S6 E10 N29 W32 S8 W16 S1 $ N1 BAS=[YR=2002] E16 N12 W16 S12 $ N12 E16 N9 $ S13 E32 N9 $ S51 W2 S8 E2 S17 UOP=[YR=1998] S11 E13 N11 W13 $ E14 S3 E15 N79 $ PTR= E15 FDG=[YR=1993] E2 SFB=[YR=1998] N12 E13 S12 W13 $ E10 SFB=[YR=1993] S4 E6 N4 W6 $ S4 E6 N4 E7 S26 W25 N26 $ W15 $.

EXTRA FEATURES

LN	OB/XF CODE	DESCRIPTION	BLD	CAP	L	W	UNITS	UT	Adj R	ADJ UNIT PRICE	ORIG COND	YEAR ON	YEAR ACTUAL	Q	% COND	OB/XF MKT VALUE	NOTES
1	0504	FP-ELECTRI	0	100	0	0	1.00	UT	2,000.00	2,000.00	100	1977	1977	3	36	720	
2	0860	POOL/SPA	0	100	0	0	1.00	UT	60,000.00	60,000.00	100	1977	1977	05	85	51,000	
4	1242	WD DECK A	0	100	0	0	524.00	SF	10.00	10.00	100	1996	1996	3	20	1,048	
8	0680	POLE SHED	0	100	0	0	115.00	SF	10.00	10.00	100	1977	1977	3	20	230	
10	1126	CB/STC 8"	0	100	0	0	38.00	SF	8.00	8.00	100	1999	1999	3	73	222	

LAND DESCRIPTION

TOTAL OB/XF 53,220

LN	USE CODE	CLS	LAND USE DESCRIPTION	CAP	RD	LOC ZONE	FRONT	DEPTH	TOT LND UTS	UNIT TYPE	DT	DPTH FACT	% COND	TOT ADJ	UNIT PRICE	ADJ UNIT PRICE	LAND VALUE	OTHER ADJUSTMENTS AND NOTES	YEAR	DENSITY	DECL	FRZ	YR	CONSRV
1	000131	C	RES CREEK	100		RSF-1	0.00	0.00	1.00	LT		1.00	1.00	1.00	1,000,000.00	1,000,000.00	1,000,000							

REVIEW DATE 01/01/2023 BY CD Total Acres: 0.00 Total Land Value: 1,000,000 Market: 0 Agricultural: 0 Common: 1,000,000 PRINTED 07/09/2026 BY SYS