LOT 26
SEA MARSH VILLAGE 1 PB 4/11

HARPER RICHARD SCOTT & MARYELLEN ZIEZIULA
11 RED MAPLE ROAD
FERNANDINA BEACH, FL 32034

2026

01-6N-29-1900-0026-0000

NASSAU COUNTY PROPERTY

BUILDING CHARACTERISTICS

ELEMENT	CD	CONSTRUCTION
Exterior Wall	12	CEDAR 100
Roof Structur	03	GABLE/HIP 100
Roof Cover	03	COMP SHNGL 100
Interior Wall	05	DRYWALL 100
Interior Floo	11	CLAY TILE 50
Interior Floo	12	HARDWOOD 50
Air Condition	03	CENTRAL 100
Heating Type	04	AIR DUCTED 100
Bedrooms		3 100
Bathrooms		3 100
Frame	02	WOOD FRAME 100
Stories	1.	1. 100
Units		0 100
BUD8 Adjustme	05	DIST 1A 100
Occupancy	00	NONE 100
Quality	06	Quality Level 06
DOR CODE	0100	SINGLE FAMILY
MAP NUM		MKT AREA 10
NEIGHBORHOOD/LOC	10001.00	

AREA TYPE	TOTAL GROSS AREA	PCT OF BASE	YEAR	TOT ADJ AREA	SUBAREA MARKET VALUE
BAS	2,676	100	1993	2,676	656,904
BAS	135	100	1998	135	33,140
FGR	624	55	1998	343	84,199
FGR	252	55	2005	139	34,122
FOP	16	30	1993	5	1,227
FOP	180	30	1993	54	13,256
FSP	286	40	2002	114	27,985
FST	12	55	1993	7	1,719
FST	30	55	2005	16	3,927
UOP	24	20	1993	5	1,227
TOTALS	4,235			3,494	857,708

MARKET ADJUSTMENTS

TYPE	MDL	EFF. AREA	TOT ADJ PTS	EFF. BASE RATE	REPL. COST NEW	AYB	EYB	ECON	FNCT		NORM	% COND
0500	11	3,494	155.6640	258.40	902,850	1984	2015	0	0	0	5.00	95.00

1 SFR CUST 100% - 2024 Heated Area: 2811 HX Base Yr 2024

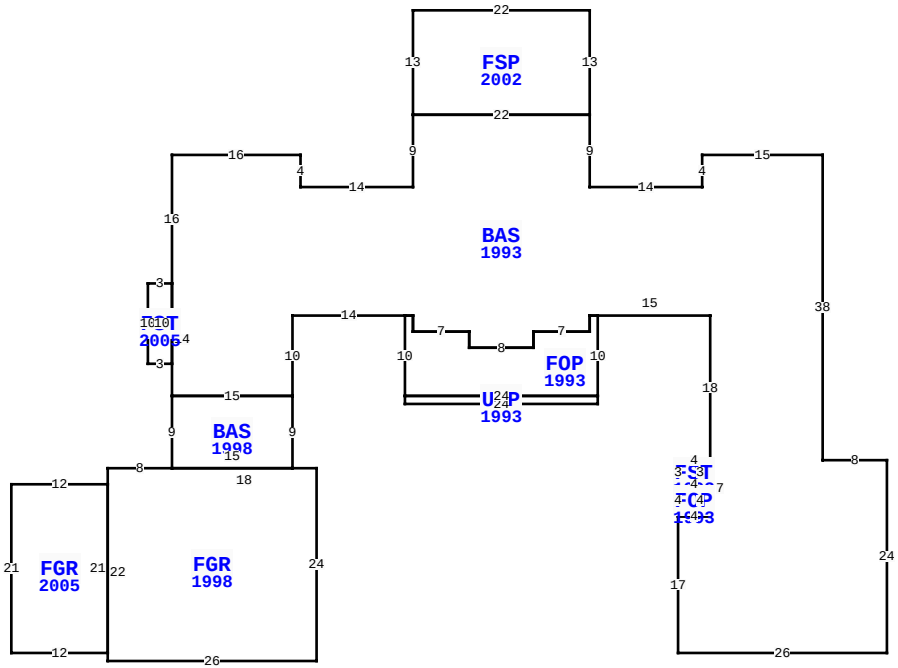

11 RED MAPLE RD, FERNANDINA BEACH

BLD DATE		LGL DATE	
XF DATE		LAND DATE	05/07/2025 MLU
INC DATE		AG DATE	

VALUATION SUMMARY

VALUATION BY		STANDARD
Tax Group: 5	Tax Dist:	
BUILDING MARKET VALUE		857,708
TOTAL MARKET OB/XF VALUE		1,222
TOTAL LAND VALUE - MARKET		700,000
TOTAL MARKET VALUE		1,558,930
SOH/AGL Deduction		827,588
ASSESSED VALUE		731,342
TOTAL EXEMPTION VALUE	HX HB	51,411
BASE TAXABLE VALUE		679,931
TOTAL JUST VALUE		1,558,930
NCON VALUE		0
INCOME VALUE		
PREVIOUS YEAR MKT VALUE		1,265,495

PERMIT NUM	DESCRIPTION	AMT	ISSUED
G230009887		2,400	08/01/2023
M10118	MECH OTHER	0	08/01/2005
E15331	ELEC OTHER	800	07/01/2005
R07548	REPAIR/RRF	600	04/01/2005
B0209459	ADDITION	8,000	03/01/2002
B9804627	ADDITION	35,000	01/01/1998

SALES DATA

OFF RECORD Number	DATE	TYPE INST	Q / U	V / I	RSN CD	SALE PRICE
2862/1175	4/21/2026	WD	Q	I	01	2,150,000
GRANTOR: STEPHENS BEN G & JENN						
GRANTEE: HARPER RICHARD SCOT						
2638/1296	5/01/2023	WD	Q	I	01	1,400,000
GRANTOR: OSTROM WILLIAM C &						
GRANTEE: STEPHENS BEN G & JE						

BUILDING NOTES

BUILDING DIMENSIONS

BAS=[YR=1993] W15 S4 W14 N9 FSP=[YR=2002] N13 W22 S13 E22$ W22 S9 W14 N4 W16 S16 FST=[YR=2005] W3 S10 E3 N10$ S14 BAS=[YR=1998] S9 FGR=[YR=1998] W8 S2 FGR=[YR=2005] W12 S21 E12 N21$ S22 E26 N24 W18$ E15 N9 W15$ E15 N10 E14 FOP=[YR=1993] S10 UOP=[YR=1993] S1 E24 N1 W24$ E24 N10 W1 S2 W7 S2 W8 N2 W7 N2 W1$ E1 S2 E7 S2 E8 N2 E7 N2 E15 S18 FST=[YR=1993] W4 S3 FOP=[YR=1993] S4 E4 N4 W4$ E4 N3$ S7 W4 S17 E26 N24 W8 N38$.

EXTRA FEATURES

LN	OB/XF CODE	DESCRIPTION	BLD	CAP	L	W	UNITS	UT	Adj R	ADJ UNIT PRICE	ORIG COND	YEAR ON	YEAR ACTUAL	Q	% COND	OB/XF MKT VALUE	NOTES
1	0504	FP-ELECTRI	0	100	0	0	1.00	UT	2,000.00	2,000.00	100	1984	1984	3	51.5	1,030	
7	1242	WD DECK A	0	100	12	8	96.00	SF	10.00	10.00	100	2004	2004	3	20	192	

LAND DESCRIPTION

TOTAL OB/XF 1,222

LN	USE CODE	CLS	LAND USE DESCRIPTION	CAP	RD	LOC ZONE	FRONT	DEPTH	TOT LND UTS	UNIT TYPE	DT	DPTH FACT	% COND	TOT ADJ	UNIT PRICE	ADJ UNIT PRICE	LAND VALUE	OTHER ADJUSTMENTS AND NOTES	YEAR	DENSITY	DECL	FRZ	YR	CONSRV
1	000140	C	RES GOLF	100		RSF-1	0.00	0.00	1.00	LT		1.00	1.00	1.00	700,000.00	700,000.00	700,000							

REVIEW DATE 01/01/2023 BY CD Total Acres: 0.00 Total Land Value: 700,000 Market: 0 Agricultural: 0 Common: 700,000 PRINTED 07/09/2026 BY SYS