LOT 17
IN OR 2043/946
SEA MARSH VILLAGE 1 PB 4/11

BOCK PATRICIA S
11 WILLOW POND ROAD
FERNANDINA BEACH, FL 32034

2026

01-6N-29-1900-0017-0000

BUILDING CHARACTERISTICS

ELEMENT	CD	CONSTRUCTION
Exterior Wall	12	CEDAR 60
Exterior Wall	16	WD FR STUC 40
Roof Structur	08	IRREGULAR 100
Roof Cover	03	COMP SHNGL 100
Interior Wall	05	DRYWALL 100
Interior Floo	14	CARPET 80
Interior Floo	12	HARDWOOD 20
Air Condition	03	CENTRAL 100
Heating Type	04	AIR DUCTED 100
Bedrooms		3 100
Bathrooms		3 100
Frame	02	WOOD FRAME 100
Stories	2.	2. 100
Units		0 100
BUD8 Adjustme	05	DIST 1A 100
Quality	05	Quality Level 05
DOR CODE	0100	SINGLE FAMILY
MAP NUM		MKT AREA 10
NEIGHBORHOOD/LOC	10001.00	

AREA TYPE	TOTAL GROSS AREA	PCT OF BASE	YEAR	TOT ADJ AREA	SUBAREA MARKET VALUE
BAS	431	100	1993	431	86,839
BAS	518	100	1993	518	104,367
BAS	1,612	100	1993	1,612	324,787
BAS	108	100	2002	108	21,760
BAS	180	100	2002	180	36,266
DCK	78	10	1993	8	1,612
DCK	112	10	1993	11	2,216
FGR	646	55	2002	355	71,525
FOP	66	30	1993	20	4,030
PTO	90	5	1993	4	806
TOTALS	4,326			3,321	669,118

MARKET ADJUSTMENTS

TYPE	MDL	EFF. AREA	TOT ADJ PTS	EFF. BASE RATE	REPL. COST NEW	AYB	EYB	ECON	FNCT		NORM	% COND
0500	11	3,321	141.1354	234.28	778,044	1977	1997	0	0	0	14.00	86.00

1 SFR CUST 100% - 2017 Heated Area: 2849 HX Base Yr 2017

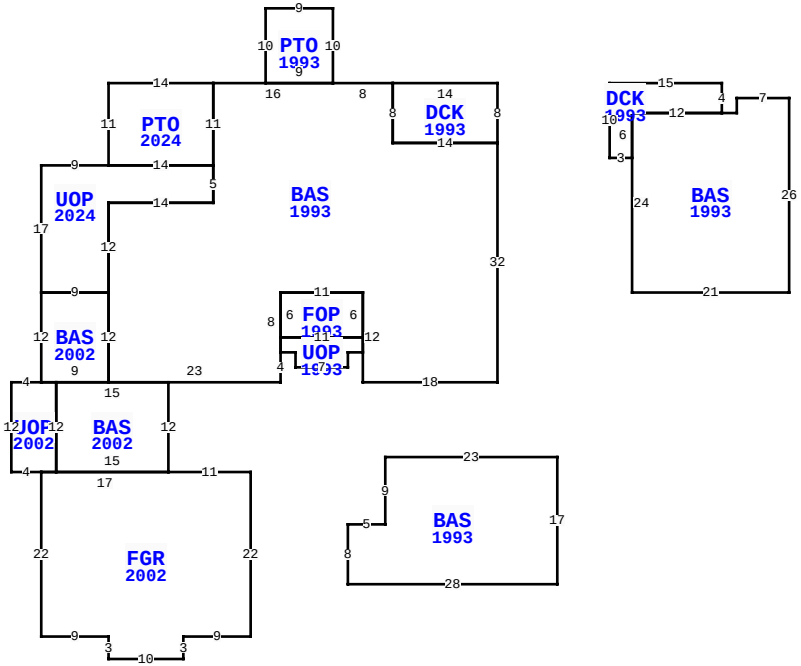

** This building has 14 Sub-Areas

11 WILLOW POND RD, FERNANDINA BEACH

BLD DATE		LGL DATE	
XF DATE		LAND DATE	05/07/2025 MLU
INC DATE		AG DATE	

NASSAU COUNTY PROPERTY

PAGE 1 of 1 5

VALUATION SUMMARY

VALUATION BY		STANDARD
Tax Group: 5	Tax Dist:	
BUILDING MARKET VALUE		669,118
TOTAL MARKET OB/XF VALUE		1,269
TOTAL LAND VALUE - MARKET		700,000
TOTAL MARKET VALUE		1,370,387
SOH/AGL Deduction		610,717
ASSESSED VALUE		759,670
TOTAL EXEMPTION VALUE	HX HB	51,411
BASE TAXABLE VALUE		708,259
TOTAL JUST VALUE		1,370,387
NCON VALUE		0
INCOME VALUE		
PREVIOUS YEAR MKT VALUE		1,356,606

PERMIT NUM	DESCRIPTION	AMT	ISSUED
B230011927	911-647	27,128	09/18/2023
P025484	REMODEL	0	04/01/2002
R023804	REPAIR/RRF	2,000	01/01/2002
8191	REPAIR/RRF	7,800	06/22/1992

SALES DATA

OFF RECORD Number	DATE	TYPE INST	Q U	V I	RSN CD	SALE PRICE
2043/0946	4/29/2016	WD	Q	I	01	775,000
GRANTOR: MICHAS JOAN S						
GRANTEE: BOOK PATRICIA S						
1428/0693	7/17/2006	WD	Q	I		815,000
GRANTOR: BITTEKER DENNIS J						
GRANTEE: MICHAS JOAN S						

BUILDING NOTES

BUILDING DIMENSIONS

BAS=[YR=1993;ORIG=-14,0] W8 W16 S11 S5 W14 S12 S12 E23 N4 N8 E11 S12 E18 N32 W14 N8 $
FGR=[YR=2002;ORIG=-61,52] S22 E9 S3 E10 N3 E9 N22 W11 W17 $
BAS=[YR=1993;ORIG=30,4] E2 N2 E7 S26 W21 N24 E12 $
BAS=[YR=1993;ORIG=-15,50] E23 S17 W28 N8 E5 N9 $
UOP=[YR=2024;ORIG=-61,28] E9 N12 E14 N5 W14 W9 S17 $
BAS=[YR=2002;ORIG=-44,52] N12 W15 S12 E15 $
PTO=[YR=2024;ORIG=-52,11] E14 N11 W14 S11 $
DCK=[YR=1993;ORIG=0,0] W14 S8 E14 N8 $
BAS=[YR=2002;ORIG=-61,28] S12 E9 N12 W9 $
PTO=[YR=1993;ORIG=-22,0] N10 W9 S10 E9 $
DCK=[YR=1993;ORIG=15,0] E15 S4 W12 S6 W3 N10 $

EXTRA FEATURES

LN	OB/XF CODE	DESCRIPTION	BLD	CAP	L	W	UNITS	UT	Adj R	ADJ UNIT PRICE	ORIG COND	YEAR ON	YEAR ACTUAL	Q	% COND	OB/XF MKT VALUE	NOTES
1	0504	FP-ELECTRI	0	100	0	0	1.00	UT	2,000.00	2,000.00	100	1977	1977	3	36	720	
5	1075	TRELLIS G	0	100	8	7	56.00	SF	35.00	35.00	100	2002	2002	3	28	549	

LAND DESCRIPTION

TOTAL OB/XF 1,269

LN	USE CODE	CLS	LAND USE DESCRIPTION	CAP	RD	LOC ZONE	FRONT	DEPTH	TOT LND UTS	UNIT TYPE	DT	DPTH FACT	% COND	TOT ADJ	UNIT PRICE	ADJ UNIT PRICE	LAND VALUE	OTHER ADJUSTMENTS AND NOTES	YEAR	DENSITY	DECL	FRZ	YR	CONSRV
1	000140	C	RES GOLF	100		RSF-1	0.00	0.00	1.00	LT		1.00	1.00	1.00	700,000.00	700,000.00	700,000							

REVIEW DATE 02/21/2024 BY TW Total Acres: 0.00 Total Land Value: 700,000 Market: 0 Agricultural: 0 Common: 700,000 PRINTED 07/09/2026 BY SYS