LOT 14
SEA MARSH VILLAGE 1 PB 4/11

SCHLUETER WILLIAM LIV TRUST &/EVERETT ELIZABETH L
14 WILLOW POND RD
FERNANDINA BEACH, FL 32034

2026

01-6N-29-1900-0014-0000

BUILDING CHARACTERISTICS

ELEMENT	CD	CONSTRUCTION
Exterior Wall	12	CEDAR 100
Roof Structur	08	IRREGULAR 100
Roof Cover	03	COMP SHNGL 100
Interior Wall	05	DRYWALL 100
Interior Floo	14	CARPET 70
Interior Floo	13	LVT/LAMNT 30
Air Condition	03	CENTRAL 100
Heating Type	04	AIR DUCTED 100
Bedrooms		2 100
Bathrooms		2.5 100
Frame	02	WOOD FRAME 100
Stories	2.	2. 100
Units		0 100
BUD8 Adjustme	05	DIST 1A 100
Occupancy	00	NONE 100
Quality	06	Quality Level 06
DOR CODE	0100	SINGLE FAMILY
MAP NUM		MKT AREA 10
NEIGHBORHOOD/LOC	10001.00	

AREA TYPE	TOTAL GROSS AREA	PCT OF BASE	YEAR	TOT ADJ AREA	SUBAREA MARKET VALUE
BAS	1,219	100	1993	1,219	222,061
BAS	280	100	1996	280	51,006
DCK	320	10	2011	32	5,829
DCK	150	10	2024	15	2,733
FCP	502	25	2024	126	22,953
FOP	36	30	1993	11	2,004
FOP	117	30	1993	35	6,376
FOP	150	30	2024	45	8,198
FUS	840	100	1993	840	153,020
UST	48	45	2024	22	4,008
TOTALS	3,662			2,625	478,187

MARKET ADJUSTMENTS

TYPE	MDL	EFF. AREA	TOT ADJ PTS	EFF. BASE RATE	REPL. COST NEW	AYB	EYB	ECON	FNCT		NORM	% COND
0500	01	2,625	125.4144	208.19	546,499	1974	2000	0	0	0	12.50	87.50

1 SFR CUST 100% - 2023 Heated Area: 2339 HX Base Yr 2023

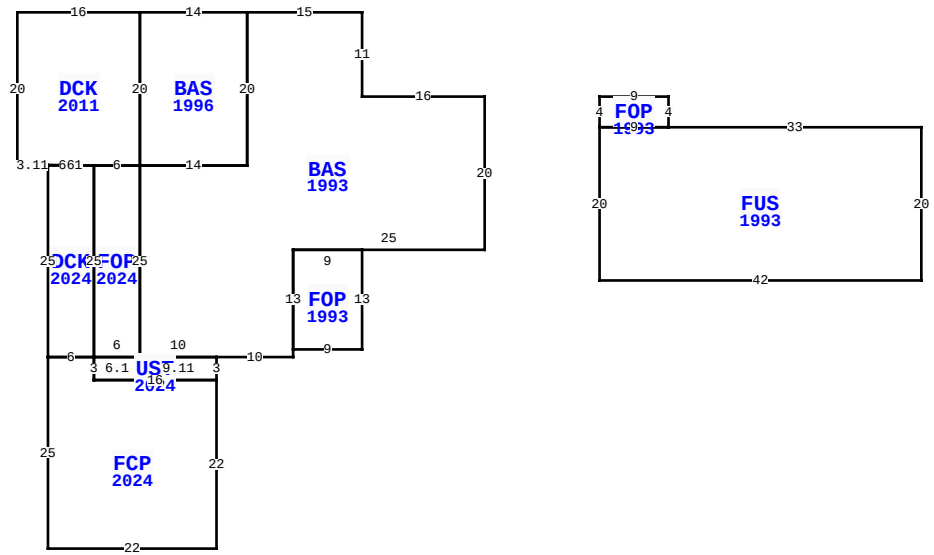

14 WILLOW POND RD, FERNANDINA BEACH

BLD DATE		LGL DATE	
XF DATE		LAND DATE	05/04/2026 MLU
INC DATE		AG DATE	

NASSAU COUNTY PROPERTY

PAGE 1 of 1 5

VALUATION SUMMARY

VALUATION BY		STANDARD
Tax Group: 5	Tax Dist:	
BUILDING MARKET VALUE		478,187
TOTAL MARKET OB/XF VALUE		3,569
TOTAL LAND VALUE - MARKET		600,000
TOTAL MARKET VALUE		1,081,756
SOH/AGL Deduction		251,260
ASSESSED VALUE		830,496
TOTAL EXEMPTION VALUE	HX HB	51,411
BASE TAXABLE VALUE		779,085
TOTAL JUST VALUE		1,081,756
NCON VALUE		0
INCOME VALUE		
PREVIOUS YEAR MKT VALUE		827,235

PERMIT NUM	DESCRIPTION	AMT	ISSUED
230005242	CRPT-22*25	65,000	04/21/2023
B24601	ADDITION	6,250	04/01/2011
B9603216	ADDITION	4,000	08/01/1996

SALES DATA

OFF RECORD Number	DATE	TYPE INST	Q / U	V / I	RSN CD	SALE PRICE
2464/0706	5/21/2021	WD	Q	I	02	640,000
GRANTOR: CARDINALE JOSEPH REV						
GRANTEE: SCHLUETER WILLIAM L						
2136/1278	7/28/2017	QC	U	I	11	100
GRANTOR: CARDINALE JOSEPH						
GRANTEE: JOSEPH P CARDINALE						

BUILDING NOTES

EXTRA FEATURES

LN	OB/XF CODE	DESCRIPTION	BLD	CAP	L	W	UNITS	UT	Adj R	ADJ UNIT PRICE	ORIG COND	YEAR ON	YEAR ACTUAL	Q	% COND	OB/XF MKT VALUE	NOTES
1	0504	FP-ELECTRI	0	100	0	0	1.00	UT	2,000.00	2,000.00	100	1974	1974	3	31.6	632	
3	0820	WOOD WALK	0	100	0	0	96.00	SF	11.75	11.75	100	1980	1980	3	40	451	
5	1242	WD DECK A	0	100	0	0	91.00	SF	10.00	10.00	100	1980	1980	3	20	182	
6	0911	SCRN RM A	0	100	20	16	320.00	SF	18.00	18.00	100	2011	2011	3	40	2,304	

BUILDING DIMENSIONS

BAS=[YR=1993;ORIG=0,0] W16 N11 W15 S20 W14 S25 E10 E10 N1 N13 E25 N20 $
FUS=[YR=1993;ORIG=24,4] E33 S20 W42 N20 E9 $
DCK=[YR=2011;ORIG=-45,-11] W16 S20 U0.1R3.11 D0.1R6.1 E6 N20 $
BAS=[YR=1996;ORIG=-31,-11] W14 S20 E14 N20 $
FOP=[YR=1993;ORIG=-25,33] E9 N13 W9 S13 $
FOP=[YR=1993;ORIG=15,0] E9 S4 W9 N4 $
PTR=[ORIG=0,0] E15 W15 $
UST=[YR=2024;ORIG=-51,34] U0R6.1 D0R9.11 S3 W16 N3 $
FOP=[YR=2024;ORIG=-45,9] W6 S25 E6 N25 $
DCK=[YR=2024;ORIG=-57,9] E6 S25 W6 N25 $

LAND DESCRIPTION

TOTAL OB/XF 3,569

LN	USE CODE	CLS	LAND USE DESCRIPTION	CAP	RD	LOC ZONE	FRONT	DEPTH	TOT LND UTS	UNIT TYPE	DT	DPTH FACT	% COND	TOT ADJ	UNIT PRICE	ADJ UNIT PRICE	LAND VALUE	OTHER ADJUSTMENTS AND NOTES	YEAR	DENSITY	DECL	FRZ	YR	CONSRV
1	000100	C	RES	100		RSF-1	0.00	0.00	1.00	LT		1.00	1.00	1.00	600,000.00	600,000.00	600,000							

REVIEW DATE 12/04/2023 BY TW Total Acres: 0.00 Total Land Value: 600,000 Market: 0 Agricultural: 0 Common: 600,000 PRINTED 07/09/2026 BY SYS