LOT 76
GOLFSIDE AT SUMMER BEACH #1
PB 5/114-118

CRUMRINE GEORGE BERNARD & SHARON ANN
4671 GENOA DR
FERNANDINA BEACH, FL 32034

2026

00-SB-30-065A-0076-0000

BUILDING CHARACTERISTICS

ELEMENT	CD	CONSTRUCTION
Exterior Wall	16	WD FR STUC 100
Roof Structur	08	IRREGULAR 100
Roof Cover	03	COMP SHNGL 100
Interior Wall	05	DRYWALL 100
Interior Floo	11	CLAY TILE 70
Interior Floo	12	HARDWOOD 30
Air Condition	03	CENTRAL 100
Heating Type	04	AIR DUCTED 100
Bedrooms		4 100
Bathrooms		3.5 100
Frame	02	WOOD FRAME 100
Stories	2.	2. 100
Units		0 100
Occupancy	00	NONE 100
Quality	04	Quality Level 04
DOR CODE	0100	SINGLE FAMILY
MAP NUM		MKT AREA 03
NEIGHBORHOOD/LOC	3019.00	

AREA TYPE	TOTAL GROSS AREA	PCT OF BASE	YEAR	TOT ADJ AREA	SUBAREA MARKET VALUE
BAS	2,838	100	1994	2,838	572,688
BAS	192	100	2008	192	38,744
FGR	534	55	1994	294	59,327
FOP	45	30	1994	14	2,825
FOP	45	30	1994	14	2,825
FOP	60	30	1994	18	3,632
FOP	76	30	1994	23	4,641
FST	42	55	1994	23	4,641
FUS	882	100	1994	882	177,981
UOP	60	20	1994	12	2,421
TOTALS	4,894			4,334	874,569

MARKET ADJUSTMENTS

TYPE	MDL	EFF. AREA	TOT ADJ PTS	EFF. BASE RATE	REPL. COST NEW	AYB	EYB	ECON	FNCT		NORM	% COND
0500	11	4,334	138.9274	230.62	999,507	1994	2000	0	0	0	12.50	87.50

1 SFR CUST 100% - 2025 Heated Area: 3912 HX Base Yr 2025

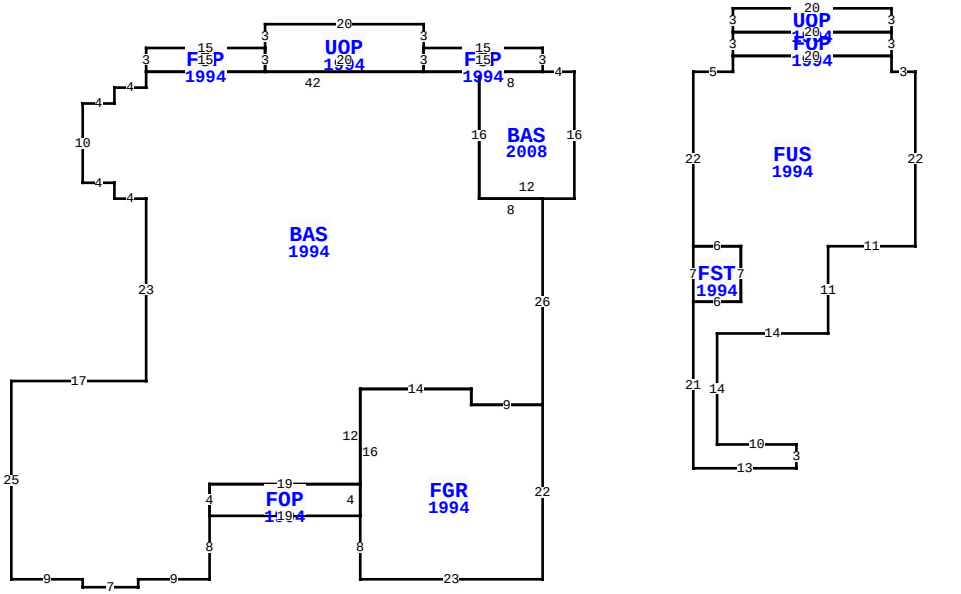

** This building has 11 Sub-Areas

4671 GENOA DR, FERNANDINA BEACH

BLD DATE		LGL DATE	
XF DATE		LAND DATE	03/26/2024 MLU
INC DATE		AG DATE	

NASSAU COUNTY PROPERTY

PAGE 1 of 1 8

VALUATION SUMMARY

VALUATION BY		STANDARD
Tax Group: 8	Tax Dist:	
BUILDING MARKET VALUE		874,569
TOTAL MARKET OB/XF VALUE		1,440
TOTAL LAND VALUE - MARKET		500,000
TOTAL MARKET VALUE		1,376,009
SOH/AGL Deduction		433,796
ASSESSED VALUE		942,213
TOTAL EXEMPTION VALUE	HX HB	51,411
BASE TAXABLE VALUE		890,802
TOTAL JUST VALUE		1,376,009
NCON VALUE		0
INCOME VALUE		
PREVIOUS YEAR MKT VALUE		1,251,031

PERMIT NUM	DESCRIPTION	AMT	ISSUED
B20677	REMODEL	35,000	10/01/2007
B00713	NEW CONSTR	160,594	01/01/1994

SALES DATA

OFF RECORD Number	DATE	TYPE INST	Q / U	V / I	RSN CD	SALE PRICE
2691/1243	1/24/2024	WD	Q	I	01	1,640,000
GRANTOR: BOOKMAN ROBERT P & BA						
GRANTEE: CRUMRINE GEORGE BER						
1236/0752	6/08/2004	WD	Q	I		770,000
GRANTOR: ABBOTT JAMES A & PATR						
GRANTEE: BOOKMAN ROBERT P &						

BUILDING NOTES

BUILDING DIMENSIONS

BAS=[YR=2008] W4 FOP=[YR=1994] N3 W15 UOP=[YR=1994] N3 W20 S3 FOP=[YR=1994] W15 S3 E15 N3$ S3 E20 N3$ S3 E15$ W8 BAS=[YR=1994] W42 S2 W4 S2 W4 S10 E4 S2 E4 S23 W17 S25 E9 S1 E7 N1 E9 N8 FOP=[YR=1994] E19 FGR=[YR=1994] S8 E23 N22 W9 N2 W14 S16$ N4 W19 S4$ N4 E19 N12 E14 S2 E9 N26 W8 N16$ S16 E12 N16$ PTR= E15 FUS=[YR=1994] E5 N2 FOP=[YR=1994] N3 UOP=[YR=1994] N3 E20 S3 W20$ E20 S3 W20$ E20 S2 E3 S22 W11 S11 W14 S14 E10 S3 W13 N21 FST=[YR=1994] E6 N7 W6 S7$ E6 N7 W6 N22$ W15$.

EXTRA FEATURES

LN	OB/XF CODE	DESCRIPTION	BLD	CAP	L	W	UNITS	UT	Adj R	ADJ UNIT PRICE	ORIG COND	YEAR ON	YEAR ACTUAL	Q	% COND	OB/XF MKT VALUE	NOTES
1	0504	FP-ELECTRI	0	100	0	0	1.00	UT	2,000.00	2,000.00	100	1994	1994	3	72	1,440	

LAND DESCRIPTION

TOTAL OB/XF 1,440

LN	USE CODE	CLS	LAND USE DESCRIPTION	CAP	RD	LOC ZONE	FRONT	DEPTH	TOT LND UTS	UNIT TYPE	DT	DPTH FACT	% COND	TOT ADJ	UNIT PRICE	ADJ UNIT PRICE	LAND VALUE	OTHER ADJUSTMENTS AND NOTES	YEAR	DENSITY	DECL	FRZ	YR	CONSRV
1	000140	C	RES GOLF	100		PUD	0.00	0.00	1.00	LT		1.00	1.00	1.00	500,000.00	500,000.00	500,000							

REVIEW DATE 01/01/2023 BY CD Total Acres: 0.00 Total Land Value: 500,000 Market: 0 Agricultural: 0 Common: 500,000 PRINTED 07/09/2026 BY SYS