LOT 74
GOLFSIDE AT SUMMER BEACH #1
PB 5/114-118

FERRARA RITA B & ALBERT E JR
4683 GENOA DR
FERNANDINA BEACH, FL 32034

2026

00-SB-30-065A-0074-0000

BUILDING CHARACTERISTICS

ELEMENT	CD	CONSTRUCTION
Exterior Wall	16	WD FR STUC 100
Roof Structur	03	GABLE/HIP 100
Roof Cover	03	COMP SHNGL 100
Interior Wall	05	DRYWALL 100
Interior Floo	14	CARPET 90
Interior Floo	12	HARDWOOD 10
Air Condition	03	CENTRAL 100
Heating Type	04	AIR DUCTED 100
Bedrooms		4 100
Bathrooms		3.5 100
Frame	02	WOOD FRAME 100
Stories	2.	2. 100
Units		0 100
Occupancy	00	NONE 100
Quality	04	Quality Level 04
DOR CODE	0100	SINGLE FAMILY
MAP NUM		MKT AREA 03
NEIGHBORHOOD/LOC	3019.00	

AREA TYPE	TOTAL GROSS AREA	PCT OF BASE	YEAR	TOT ADJ AREA	SUBAREA MARKET VALUE
BAS	2,309	100	1993	2,309	405,795
FGR	714	55	1993	393	69,067
FOP	89	30	1993	27	4,745
FOP	333	30	1993	100	17,574
FST	27	55	1993	15	2,636
FST	45	55	1993	25	4,394
FUS	1,093	100	1993	1,093	192,089
UOP	291	20	1993	58	10,193
TOTALS	4,901			4,020	706,494

MARKET ADJUSTMENTS

TYPE	MDL	EFF. AREA	TOT ADJ PTS	EFF. BASE RATE	REPL. COST NEW	AYB	EYB	ECON	FNCT		NORM	% COND
0500	11	4,020	126.0336	209.22	841,064	1993	1993	0	0	0	16.00	84.00

1 SFR CUST 100% - 2015 Heated Area: 3402 HX Base Yr 2015

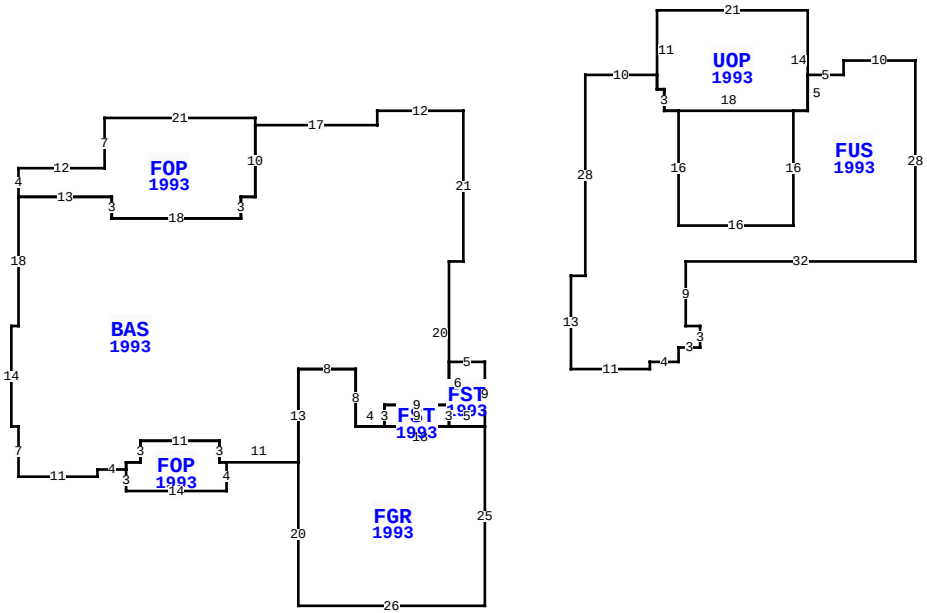

4683 GENOA DR, FERNANDINA BEACH

BLD DATE		LGL DATE	
XF DATE		LAND DATE	03/26/2024 MLU
INC DATE		AG DATE	

NASSAU COUNTY PROPERTY

PAGE 1 of 1 8

VALUATION SUMMARY

VALUATION BY		STANDARD
Tax Group: 8	Tax Dist:	
BUILDING MARKET VALUE		706,494
TOTAL MARKET OB/XF VALUE		1,630
TOTAL LAND VALUE - MARKET		500,000
TOTAL MARKET VALUE		1,208,124
SOH/AGL Deduction		526,675
ASSESSED VALUE		681,449
TOTAL EXEMPTION VALUE	HX HB	51,411
BASE TAXABLE VALUE		630,038
TOTAL JUST VALUE		1,208,124
NCON VALUE		0
INCOME VALUE		
PREVIOUS YEAR MKT VALUE		1,043,667

PERMIT NUM	DESCRIPTION	AMT	ISSUED
B1428201	WALLUNDER	11,200	01/01/2014
B9300180	NEW CONSTR	140,935	04/01/1993

SALES DATA

OFF RECORD Number	DATE	TYPE INST	Q U	V I	RSN CD	SALE PRICE
2705/739	4/05/2024	SW	U	I	11	100
GRANTOR: FERRARA RITA B						
GRANTEE: FERRARA RITA B & AL						
1782/1591	3/01/2012	WD	U	I	11	100
GRANTOR: TAYLOR VIRGINIA L & P						
GRANTEE: FERRARA RITA B						

BUILDING NOTES

BUILDING DIMENSIONS

BAS=[YR=1993] W12 S2 W17 FOP=[YR=1993] N1 W21 S7 W12 S4 E13 S3 E18 N3 E2 N10 $ S10 W2 S3 W18 N3 W13 S18 W1 S14 E1 S7 E11 N1 E4 FOP=[YR=1993] S3 E14 N4 W1N3 W11 S3 W2 S1 $ N1 E2 N3 E11 S3 E11 FGR=[YR=1993] S20 E26 N25 FST=[YR=1993] N9 W5 S6 FST=[YR=1993] W9 S3 E9 N3 $ S3 E5 $ W18 N8 W8 S13 $ N13 E8 S8 E4 N3 E9 N20 E2 N21 $ PTR= E30 FUS=[YR=1993] S16E16 N16UOP=[YR=1993] E2 N14 W21S11E1S3E18$E2N5E5 N2E10 S28W32S9E2S3W3 S2W4 S1W11 N13 E2 N28E10S2E1S3E2$ W30 $.

EXTRA FEATURES

LN	OB/XF CODE	DESCRIPTION	BLD	CAP	L	W	UNITS	UT	Adj R	ADJ UNIT PRICE	ORIG COND	YEAR ON	YEAR ACTUAL	Q	% COND	OB/XF MKT VALUE	NOTES
1	0504	FP-ELECTRI	0	100	0	0	1.00	UT	2,000.00	2,000.00	100	1993	1993	3	70	1,400	
5	1242	WD DECK A	0	100	0	0	115.00	SF	10.00	10.00	100	1993	1993	3	20	230	

LAND DESCRIPTION

TOTAL OB/XF 1,630

LN	USE CODE	CLS	LAND USE DESCRIPTION	CAP	RD	LOC ZONE	FRONT	DEPTH	TOT LND UTS	UNIT TYPE	DT	DPTH FACT	% COND	TOT ADJ	UNIT PRICE	ADJ UNIT PRICE	LAND VALUE	OTHER ADJUSTMENTS AND NOTES	YEAR	DENSITY	DECL	FRZ	YR	CONSRV
1	000140	C	RES GOLF	100	0003	PUD	0.00	0.00	1.00	LT		1.00	1.00	1.00	500,000.00	500,000.00	500,000							

REVIEW DATE 01/01/2023 BY CD Total Acres: 0.00 Total Land Value: 500,000 Market: 0 Agricultural: 0 Common: 500,000 PRINTED 07/09/2026 BY SYS