LOT 68 & PT LOT 67
IN OR 2793/444
GOLFSIDE AT SUMMER BEACH #1

WAGNER MARK & DAWN L/E/
4727 GENOA DR
FERNANDINA BEACH, FL 32034

2026

00-SB-30-065A-0068-0000

BUILDING CHARACTERISTICS

ELEMENT	CD	CONSTRUCTION
Exterior Wall	16	WD FR STUC 100
Roof Structur	03	GABLE/HIP 100
Roof Cover	03	COMP SHNGL 100
Interior Wall	05	DRYWALL 100
Interior Floo	14	CARPET 60
Interior Floo	12	HARDWOOD 40
Air Condition	03	CENTRAL 100
Heating Type	04	AIR DUCTED 100
Bedrooms		3 100
Bathrooms		2.5 100
Frame	02	WOOD FRAME 100
Stories	1.	1. 100
Units		0 100
Occupancy	00	NONE 100
Quality	04	Quality Level 04
DOR CODE	0100	SINGLE FAMILY
MAP NUM		MKT AREA 03
NEIGHBORHOOD/LOC	3019.00	

AREA TYPE	TOTAL GROSS AREA	PCT OF BASE	YEAR	TOT ADJ AREA	SUBAREA MARKET VALUE
BAS	2,447	100	1993	2,447	377,075
FGR	575	55	1993	316	48,695
FOP	38	30	1993	11	1,695
FOP	82	30	1993	25	3,853
FSP	99	40	1993	40	6,164
PTO	21	5	1993	1	154
USP	234	30	2026	70	10,787
TOTALS	3,496			2,910	448,421

MARKET ADJUSTMENTS

TYPE	MDL	EFF. AREA	TOT ADJ PTS	EFF. BASE RATE	REPL. COST NEW	AYB	EYB	ECON	FNCT		NORM	% COND
0500	01	2,910	108.5700	180.23	524,469	1991	1996	0	0	0	14.50	85.50

1 SFR CUST 100% - 2025 Heated Area: 2447 HX Base Yr 2025

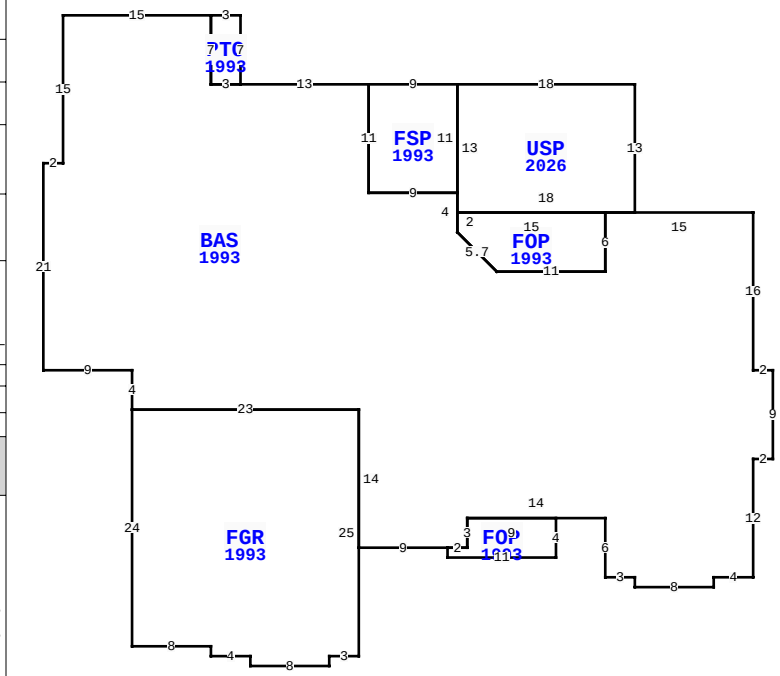

4727 GENOA DR, FERNANDINA BEACH

BLD DATE		LGL DATE	
XF DATE		LAND DATE	03/26/2024 MLU
INC DATE		AG DATE	

NASSAU COUNTY PROPERTY

PAGE 1 of 1 8

VALUATION SUMMARY

VALUATION BY		STANDARD
Tax Group: 8	Tax Dist:	
BUILDING MARKET VALUE		448,421
TOTAL MARKET OB/XF VALUE		54,152
TOTAL LAND VALUE - MARKET		500,000
TOTAL MARKET VALUE		1,002,573
SOH/AGL Deduction		38,810
ASSESSED VALUE		963,763
TOTAL EXEMPTION VALUE	HX HB	51,411
BASE TAXABLE VALUE		912,352
TOTAL JUST VALUE		1,002,573
NCON VALUE		1,474
INCOME VALUE		
PREVIOUS YEAR MKT VALUE		936,990

PERMIT NUM	DESCRIPTION	AMT	ISSUED
B250000105	SCRN ENCL	59,500	01/06/2025
8429	ADDITION	2,800	10/12/1992
8347	ADDITION	6,700	08/31/1992
6998	NEW CONSTR	96,140	02/08/1991

SALES DATA

OFF RECORD Number	DATE	TYPE INST	Q / U	V / I	RSN CD	SALE PRICE
2793/444	6/09/2025	LE	U	I	11	100
GRANTOR: WAGNER MARK & DAWN						
GRANTEE: WAGNER FAMILY TRUST						
2692/880	2/01/2024	WD	Q	I	01	1,050,000
GRANTOR: SHRODER CATHERINE A						
GRANTEE: WAGNER MARK & DAWN						

BUILDING NOTES

BUILDING DIMENSIONS

BAS=[YR=1993;ORIG=0,0] W15 S6 W11 U4L4 N4 W9 N11 W13 W3 N7 W15 S15 W2 S21 E9 S4 E23 S14 E9 E2 N3 E14 S6 E3 S1 E8 N1 E4 N12 E2 N9 W2 N16 $
FGR=[YR=1993;ORIG=-63,20] S24 E8 S1 E4 S1 E8 N1 E3 N25 W23 $
FSP=[YR=1993;ORIG=-30,-2] N11 W9 S11 E9 $
FOP=[YR=1993;ORIG=-15,0] W15 S2 D4R4 E11 N6 $
FOP=[YR=1993;ORIG=-31,34] S1 E11 N4 W9 S3 W2 $
PTO=[YR=1993;ORIG=-52,-13] N7 W3 S7 E3 $
USP=[YR=2026;ORIG=-30,-13] E18 S13 W18 N13 $
.

EXTRA FEATURES

LN	OB/XF CODE	DESCRIPTION	BLD	CAP	L	W	UNITS	UT	Adj R	ADJ UNIT PRICE	ORIG COND	YEAR ON	YEAR ACTUAL	Q	% COND	OB/XF MKT VALUE	NOTES
1	0500	FP-PRE FAB	0	100	0	0	1.00	UT	3,500.00	3,500.00	100	1991	1991	3	66	2,310	
5	0860	POOL/SPA	0	100	0	0	1.00	UT	60,000.00	60,000.00	100	1992	1992	05	85	51,000	
6	0911	SCRN RM A	0	100	0	0	234.00	SF	18.00	18.00	100	1992	1992	3	20	842	

LAND DESCRIPTION

TOTAL OB/XF 54,152

LN	USE CODE	CLS	LAND USE DESCRIPTION	CAP	RD	LOC ZONE	FRONT	DEPTH	TOT LND UTS	UNIT TYPE	DT	DPTH FACT	% COND	TOT ADJ	UNIT PRICE	ADJ UNIT PRICE	LAND VALUE	OTHER ADJUSTMENTS AND NOTES	YEAR	DENSITY	DECL	FRZ	YR	CONSRV
1	000140	C	RES GOLF	100	0003	PUD	0.00	0.00	1.00	LT		1.00	1.00	1.00	500,000.00	500,000.00	500,000							

REVIEW DATE 01/01/2023 BY CD Total Acres: 0.00 Total Land Value: 500,000 Market: 0 Agricultural: 0 Common: 500,000 PRINTED 07/09/2026 BY SYS