LOTS 62 & 63
GOLFSIDE AT SUMMER BEACH #1
PB 5/114-118

DALLAS DAVID TYLER
1731 REGATTA DRIVE
FERNANDINA BEACH, FL 32034

2026

00-SB-30-065A-0062-0000

BUILDING CHARACTERISTICS

ELEMENT	CD	CONSTRUCTION
Exterior Wall	16	WD FR STUC 100
Roof Structur	08	IRREGULAR 100
Roof Cover	03	COMP SHNGL 100
Interior Wall	05	DRYWALL 80
Interior Wall	08	DECORATIVE 20
Interior Floo	11	CLAY TILE 70
Interior Floo	14	CARPET 30
Air Condition	03	CENTRAL 100
Heating Type	04	AIR DUCTED 100
Bedrooms		3 100
Bathrooms		5 100
Frame	02	WOOD FRAME 100
Stories	1.	1. 100
Units		0 100
Occupancy	00	NONE 100
Quality	04	Quality Level 04
DOR CODE	0100	SINGLE FAMILY
MAP NUM		MKT AREA 03
NEIGHBORHOOD/LOC	3019.00	

AREA TYPE	TOTAL GROSS AREA	PCT OF BASE	YEAR	TOT ADJ AREA	SUBAREA MARKET VALUE
BAS	3,849	100	1997	3,849	834,425
BAS	246	100	2025	246	53,330
FGR	596	55	1997	328	71,108
FGR	665	55	2025	366	79,345
FOP	18	30	1997	5	1,084
FOP	96	30	2025	29	6,287
UOP	99	20	1997	20	4,336
UOP	765	20	2025	153	33,169
TOTALS	6,334			4,996	1,083,083

MARKET ADJUSTMENTS

TYPE	MDL	EFF. AREA	TOT ADJ PTS	EFF. BASE RATE	REPL. COST NEW	AYB	EYB	ECON	FNCT		NORM	% COND
0500	11	4,996	137.4727	228.20	1,140,087	1997	2015	0	0	0	5.00	95.00

1 SFR CUST 0% - 2026 Heated Area: 4095 HX Base Yr

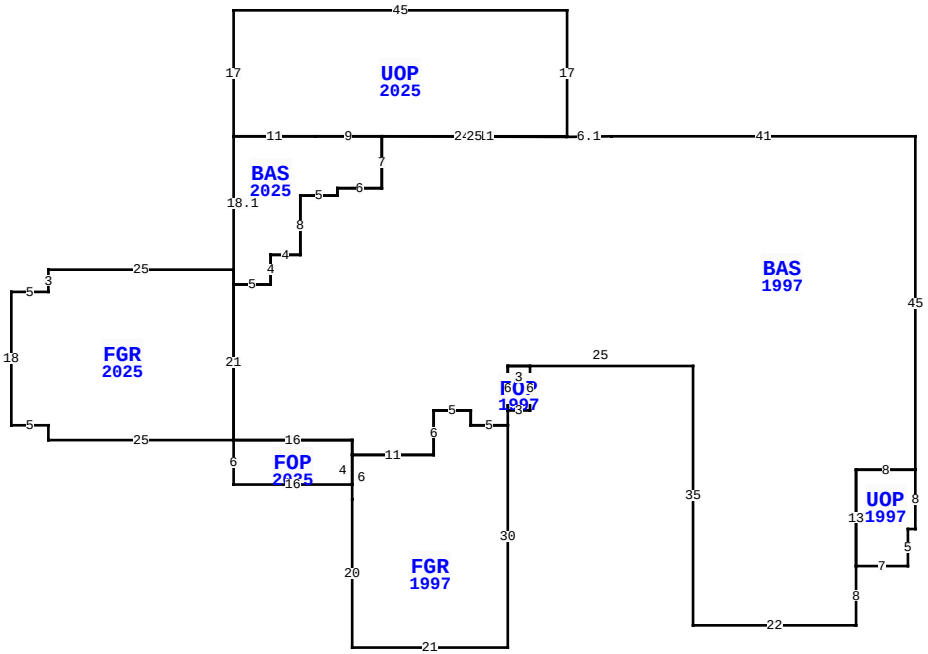

1731 REGATTA DR, FERNANDINA BEACH

BLD DATE		LGL DATE	
XF DATE		LAND DATE	03/26/2024 MLU
INC DATE		AG DATE	

NASSAU COUNTY PROPERTY

PAGE 1 of 1 8

VALUATION SUMMARY

VALUATION BY	STANDARD
Tax Group: 8	Tax Dist:
BUILDING MARKET VALUE	1,083,083
TOTAL MARKET OB/XF VALUE	45,580
TOTAL LAND VALUE - MARKET	600,000
TOTAL MARKET VALUE	1,728,663
SOH/AGL Deduction	0
ASSESSED VALUE	1,728,663
TOTAL EXEMPTION VALUE	0
BASE TAXABLE VALUE	1,728,663
TOTAL JUST VALUE	1,728,663
NCON VALUE	0
INCOME VALUE	
PREVIOUS YEAR MKT VALUE	1,418,189

PERMIT NUM	DESCRIPTION	AMT	ISSUED
23005484	ADTIN/RMDL	375,000	04/27/2023
B9704031	SWIM POOL	14,000	06/01/1997
B9603483	NEW CONSTR	151,349	11/01/1996

SALES DATA

OFF RECORD Number	DATE	TYPE INST	Q / U	V / I	RSN CD	SALE PRICE
2822/397	10/06/2025	WD	Q	I	01	2,050,000
GRANTOR: BARTH BRIAN						
GRANTEE: DALLAS DAVID TYLER						
2562/0939	5/11/2022	WD	Q	I	02	1,200,000
GRANTOR: BUTLER SAMUEL D LIVIN						
GRANTEE: BARTH BRIAN & CARRI						

BUILDING NOTES

BUILDING DIMENSIONS

BAS=[YR=1997;ORIG=-12,-35] W41 D0.1L6.1 U0.1L24.11 S7 W6 S1 W5 S8 W4 S4 W5 S21 E16 S2 E11 N6 E5 S2 E5 N2 N6 E25 S35 E22 N8 N13 E8 N45 $
FGR=[YR=1997;ORIG=-88,14] S20 E21 N30 W5 N2 W5 S6 W11 S6 $
BAS=[YR=2025;ORIG=-93,-35] W11 D18.1L0 D1.11R0 E5 N4 E4 N8 E5 N1 E6 N7 W9 $
UOP=[YR=1997;ORIG=-20,23] E7 N5 E1 N8 W8 S13 $
FOP=[YR=2025;ORIG=-104,6] S6 E16 N4 N2 W16 $
FOP=[YR=1997;ORIG=-67,2] E3 N6 W3 S6 $
FGR=[YR=2025;ORIG=-104,-17] W25 S3 W5 S18 E5 S2 E25 N21 N2 $
UOP=[YR=2025;ORIG=-104,-52] S17 E11 E9 E25 N17 W45 $
.

EXTRA FEATURES

LN	OB/XF CODE	DESCRIPTION	BLD	CAP	L	W	UNITS	UT	Adj R	ADJ UNIT PRICE	ORIG COND	YEAR ON	YEAR ACTUAL	Q	% COND	OB/XF MKT VALUE	NOTES
1	0504	FP-ELECTRI	0	0	0	0	2.00	UT	2,000.00	2,000.00	100	1997	1997	3	77	3,080	
4	0860	POOL/SPA	0	0	0	0	1.00	UT	50,000.00	50,000.00	100	1997	2010	04	85	42,500	

LAND DESCRIPTION

TOTAL OB/XF 45,580

LN	USE CODE	CLS	LAND USE DESCRIPTION	CAP	RD	LOC ZONE	FRONT	DEPTH	TOT LND UTS	UNIT TYPE	DT	DPTH FACT	% COND	TOT ADJ	UNIT PRICE	ADJ UNIT PRICE	LAND VALUE	OTHER ADJUSTMENTS AND NOTES	YEAR	DENSITY	DECL	FRZ	YR	CONSRV
1	000140	C	RES GOLF	0		PUD	0.00	0.00	2.00	LT		1.00	1.00	0.60	500,000.00	300,000.00	600,000							

REVIEW DATE 04/24/2024 BY DJ Total Acres: 0.00 Total Land Value: 600,000 Market: 0 Agricultural: 0 Common: 600,000 PRINTED 07/09/2026 BY SYS