LOT 26
GOLFSIDE AT SUMMER BEACH #1
PB 5/114-118

MILLIKEN FRANK JR & JANET L/E/
1614 REGATTA DRIVE
FERNANDINA BEACH, FL 32034

2026

00-SB-30-065A-0026-0000

NASSAU COUNTY PROPERTY

BUILDING CHARACTERISTICS

ELEMENT	CD	CONSTRUCTION
Exterior Wall	10	ABOVE AVG 50
Exterior Wall	20	FACE BRICK 50
Roof Structur	08	IRREGULAR 100
Roof Cover	03	COMP SHNGL 100
Interior Wall	05	DRYWALL 100
Interior Floo	12	HARDWOOD 50
Interior Floo	14	CARPET 50
Air Condition	03	CENTRAL 100
Heating Type	04	AIR DUCTED 100
Bedrooms		3 100
Bathrooms		3 100
Frame	02	WOOD FRAME 100
Stories	2.	2. 100
Units		0 100
Quality	04	Quality Level 04
DOR CODE	0100	SINGLE FAMILY
MAP NUM		MKT AREA 03
NEIGHBORHOOD/LOC	3019.00	

AREA TYPE	TOTAL GROSS AREA	PCT OF BASE	YEAR	TOT ADJ AREA	SUBAREA MARKET VALUE
BAS	1,881	100	1998	1,881	334,134
FGR	598	55	1998	329	58,442
FOP	119	30	1998	36	6,395
FSP	136	40	1993	54	9,593
FUS	1,670	100	1998	1,670	296,653
UOP	63	20	1998	13	2,309
UOP	91	20	1998	18	3,197
UOP	147	20	1998	29	5,151
TOTALS	4,705			4,030	715,875

MARKET ADJUSTMENTS

TYPE	MDL	EFF. AREA	TOT ADJ PTS	EFF. BASE RATE	REPL. COST NEW	AYB	EYB	ECON	FNCT		NORM	% COND
0500	11	4,030	128.3568	213.07	858,672	1998	1998	0	0	0	16.63	83.37

1 SFR CUST 100% - 2020 Heated Area: 3551 HX Base Yr 2020

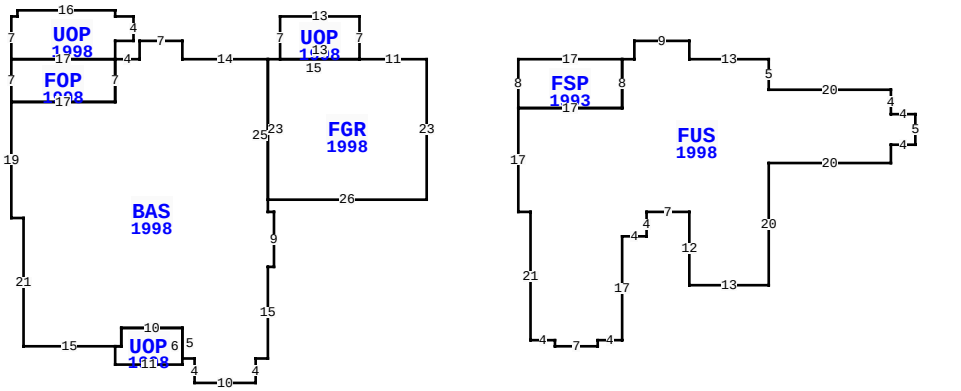

1614 REGATTA DR, FERNANDINA BEACH

BLD DATE		LGL DATE	
XF DATE		LAND DATE	03/26/2024 MLU
INC DATE		AG DATE	

VALUATION SUMMARY

VALUATION BY		STANDARD
Tax Group: 8	Tax Dist:	
BUILDING MARKET VALUE		715,875
TOTAL MARKET OB/XF VALUE		1,580
TOTAL LAND VALUE - MARKET		500,000
TOTAL MARKET VALUE		1,217,455
SOH/AGL Deduction		473,566
ASSESSED VALUE		743,889
TOTAL EXEMPTION VALUE	HX HB	51,411
BASE TAXABLE VALUE		692,478
TOTAL JUST VALUE		1,217,455
NCON VALUE		0
INCOME VALUE		
PREVIOUS YEAR MKT VALUE		1,207,602

PERMIT NUM	DESCRIPTION	AMT	ISSUED
B9704129	NEW CONSTR	397,650	07/01/1997

SALES DATA

OFF RECORD Number	DATE	TYPE INST	Q / U	V / I	RSN CD	SALE PRICE
2563/0737	5/05/2022	QC	U	I	11	100
GRANTOR: MILLIKEN JANET KAYE &						
GRANTEE: MILLIKEN JANET & FR						
2265/0567	3/18/2019	WD	Q	I	02	705,000
GRANTOR: GUENTHER EDITH REV DE						
GRANTEE: MILLIKEN JANET KAYE						

BUILDING NOTES

BUILDING DIMENSIONS

FGR=[YR=1998] W11 UOP=[YR=1998] N7 W13 S7 E13 $W15
BAS=[YR=1998] W14 N3 W7 S3 W4 UOP=[YR=1998] N3 E3 N4 W3 N1
W16 S1 W1 S7 FOP=[YR=1998] S7 E17 N7 W17 $ E17 $ S7 W17 S19
E2 S21 E15 UOP=[YR=1998] S3 E11 N6 W10 S3 W1 $ E1 N3 E10 S5
E2 S4 E10 N4 E2 N15 E1 N9 W1 N25 $ S23 E26 N23 $ PTR= E15
FSP=[YR=1993] E17 FUS=[YR=1998] E2 N3 E9 S3 E13 S5 E20 S4 E4
S5 W4 S3 W20 S20 W13 N12 W7 S4 W4 S17 W4 S1 W7 N1 W4 N21 W2
N17 E17 N8 $ S8 W17 N8 $ W15 $.

EXTRA FEATURES

LN	OB/XF CODE	DESCRIPTION	BLD	CAP	L	W	UNITS	UT	Adj R	ADJ UNIT PRICE	ORIG COND	YEAR ON	YEAR ACTUAL	Q	% COND	OB/XF MKT VALUE	NOTES
1	0504	FP-ELECTRI	0	100	0	0	1.00	UT	2,000.00	2,000.00	100	1998	1998	3	79	1,580	

LAND DESCRIPTION

TOTAL OB/XF 1,580

LN	USE CODE	CLS	LAND USE DESCRIPTION	CAP	RD	LOC ZONE	FRONT	DEPTH	TOT LND UTS	UNIT TYPE	DT	DPTH FACT	% COND	TOT ADJ	UNIT PRICE	ADJ UNIT PRICE	LAND VALUE	OTHER ADJUSTMENTS AND NOTES	YEAR	DENSITY	DECL	FRZ	YR	CONSRV
1	000140	C	RES GOLF	100		PUD	0.00	0.00	1.00	LT		1.00	1.00	1.00	500,000.00	500,000.00	500,000							

REVIEW DATE 01/01/2023 BY CD Total Acres: 0.00 Total Land Value: 500,000 Market: 0 Agricultural: 0 Common: 500,000 PRINTED 07/09/2026 BY SYS