LOT 14 & PT 12-2N-28
IN OR 2589/1100
GOLFSIDE AT SUMMER BEACH #1

GREY BRIANE M
637 SWARTHMORE BLVD
PACIFIC PALISADES, CA 90272

2026

00-SB-30-065A-0014-0000

BUILDING CHARACTERISTICS

ELEMENT	CD	CONSTRUCTION
Exterior Wall	31	HARDIE BRD 100
Roof Structur	03	GABLE/HIP 100
Roof Cover	03	COMP SHNGL 100
Interior Wall	05	DRYWALL 100
Interior Floo	13	LVT/LAMNT 100
Air Condition	03	CENTRAL 100
Heating Type	04	AIR DUCTED 100
Bedrooms		3 100
Bathrooms		2.5 100
Frame	02	WOOD FRAME 100
Stories	2.	2. 100
Units		0 100
BUD8 Adjustme	05	DIST 1A 100
Occupancy	00	NONE 100
Quality	04	Quality Level 04

DOR CODE	0100	SINGLE FAMILY	
MAP NUM		MKT AREA	03
NEIGHBORHOOD/LOC	3019.00		

AREA TYPE	TOTAL GROSS AREA	PCT OF BASE	YEAR	TOT ADJ AREA	SUBAREA MARKET VALUE
BAS	1,657	100	1993	1,657	231,606
BAS	32	100	2025	32	4,473
BAS	387	100	2025	387	54,092
FGR	624	55	1993	343	47,942
FSP	459	40	2025	184	25,718
FUS	420	100	1993	420	58,705
FUS	334	100	2025	334	46,684
TOTALS	3,913			3,357	469,221

MARKET ADJUSTMENTS

TYPE	MDL	EFF. AREA	TOT ADJ PTS	EFF. BASE RATE	REPL. COST NEW	AYB	EYB	ECON	FNCT		NORM	% COND
0900	01	3,357	105.2940	146.36	491,331	1988	2015	0	0	0	4.50	95.50

1 SNGL FAM 0% - 2023 Heated Area: 2830 HX Base Yr

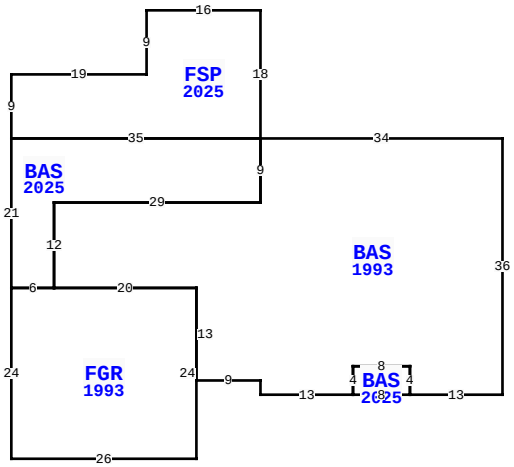

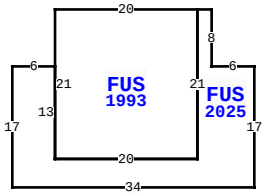

1664 REGATTA DR, FERNANDINA BEACH

BLD DATE		LGL DATE	
XF DATE		LAND DATE	03/26/2024 MLU
INC DATE		AG DATE	

NASSAU COUNTY PROPERTY

PAGE 1 of 1 8

VALUATION SUMMARY

VALUATION BY	STANDARD
Tax Group: 8	Tax Dist:
BUILDING MARKET VALUE	469,221
TOTAL MARKET OB/XF VALUE	1,200
TOTAL LAND VALUE - MARKET	500,000
TOTAL MARKET VALUE	970,421
SOH/AGL Deduction	0
ASSESSED VALUE	970,421
TOTAL EXEMPTION VALUE	0
BASE TAXABLE VALUE	970,421
TOTAL JUST VALUE	970,421
NCON VALUE	0
INCOME VALUE	
PREVIOUS YEAR MKT VALUE	976,495

PERMIT NUM	DESCRIPTION	AMT	ISSUED
2300110853	ADD FOOP, REMODEL	750,000	08/15/2023
BP 4310	N/A	149,230	08/20/1987

SALES DATA

OFF RECORD Number	DATE	TYPE INST	Q U	V I	RSN CD	SALE PRICE
2589/1100	8/31/2022	WD	Q	I	02	876,100
GRANTOR: YONEKURA STEPHANIE						
GRANTEE: GREY BRIANE M						
2579/0743	7/15/2022	WD	Q	I	01	874,000
GRANTOR: BROUGHTON JAMES A & N						
GRANTEE: YONEKURA STEPHANIE						

BUILDING NOTES

EXTRA FEATURES

LN	OB/XF CODE	DESCRIPTION	BLD	CAP	L	W	UNITS	UT	Adj R	ADJ UNIT PRICE	ORIG COND	YEAR ON	YEAR ACTUAL	Q	% COND	OB/XF MKT VALUE	NOTES
1	0504	FP-ELECTRI	0	0	0	0	1.00	UT	2,000.00	2,000.00	100	1988	1988	3	60	1,200	

BUILDING DIMENSIONS

BAS=[YR=1993;ORIG=0,0] W34 S9 W29 S12 E20 S13 E9 S2 E13 N4 E8 S4 E13 N36 $
FGR=[YR=1993;ORIG=-63,21] W6 S24 E26 N24 W20 $
FUS=[YR=1993;ORIG=30,0] E20 S21 W20 N21 $
BAS=[YR=2025;ORIG=-21,36] E8 N4 W8 S4 $
PTR=[ORIG=0,0] E10 W10 $
BAS=[YR=2025;ORIG=-69,0] S21 E6 N12 E29 N9 W35 $
FSP=[YR=2025;ORIG=-69,0] E35 N18 W16 S9 W19 S9 $
FUS=[YR=2025;ORIG=50,0] E2 S8 E6 S17 W34 N17 E6 S13 E20 N21 $
.

LAND DESCRIPTION

TOTAL OB/XF 1,200

LN	USE CODE	CLS	LAND USE DESCRIPTION	CAP	RD	LOC ZONE	FRONT	DEPTH	TOT LND UTS	UNIT TYPE	DT	DPTH FACT	% COND	TOT ADJ	UNIT PRICE	ADJ UNIT PRICE	LAND VALUE	OTHER ADJUSTMENTS AND NOTES	YEAR	DENSITY	DECL	FRZ	YR	CONSRV
1	000140	C	RES GOLF	0		PUD	0.00	0.00	1.00	LT		1.00	1.00	1.00	500,000.00	500,000.00	500,000							

REVIEW DATE 12/05/2024 BY DJ Total Acres: 0.00 Total Land Value: 500,000 Market: 0 Agricultural: 0 Common: 500,000 PRINTED 07/09/2026 BY SYS