SUB LOT C & D OF 9
EX S-1 OF SUB C
258 PB 2 PG 54

COVER CHARLES B
217 N 15TH ST
FERNANDINA BEACH, FL 32034

2026

00-00-31-1800-0258-R09C

BUILDING CHARACTERISTICS

ELEMENT	CD	CONSTRUCTION
Exterior Wall	07	ASB SHNGLE 100
Roof Structur	03	GABLE/HIP 100
Roof Cover	03	COMP SHNGL 100
Interior Wall	03	PLASTER 100
Interior Floo	12	HARDWOOD 100
Air Condition	03	CENTRAL 100
Heating Type	04	AIR DUCTED 100
Bedrooms		3 100
Bathrooms		2 100
Frame	02	WOOD FRAME 100
Stories	1.	1. 100
Units		0 100
BUD8 Adjustme	02	DIST FB 100
Occupancy	00	NONE 100
Quality	03	Quality Level 03

DOR CODE 0100 SINGLE FAMILY
MAP NUM | MKT AREA 01
NEIGHBORHOOD/LOC 1007.00

AREA TYPE	TOTAL GROSS AREA	PCT OF BASE	YEAR	TOT ADJ AREA	SUBAREA MARKET VALUE
BAS	1,325	100	1993	1,325	104,307
FGR	264	55	1993	145	11,415
FOP	36	30	1993	11	866
FSP	200	40	1993	80	6,298
UOP	45	20	1993	9	708
UOP	48	20	1993	10	788
UOP	175	20	1993	35	2,755
TOTALS	2,093			1,615	127,136

MARKET ADJUSTMENTS

TYPE	MDL	EFF. AREA	TOT ADJ PTS	EFF. BASE RATE	REPL. COST NEW	AYB	EYB	ECON	FNCT		NORM	% COND
0100	01	1,615	107.1000	112.46	181,623	1950	1980	0	0	0	30.00	70.00

1 SINGLE FAM 100% - 2023 Heated Area: 1325 HX Base Yr 2023

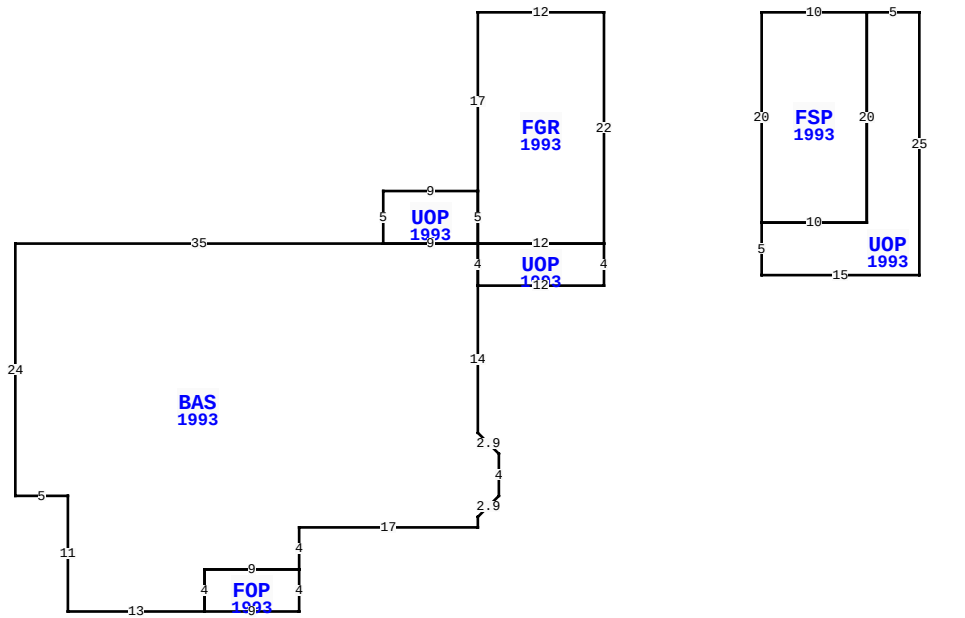

217 N 15TH ST, FERNANDINA BEACH

BLD DATE		LGL DATE	
XF DATE		LAND DATE	05/06/2026 MLU
INC DATE		AG DATE	

NASSAU COUNTY PROPERTY

PAGE 1 of 1 2

VALUATION SUMMARY

VALUATION BY		STANDARD
Tax Group: 2	Tax Dist:	
BUILDING MARKET VALUE		127,136
TOTAL MARKET OB/XF VALUE		48
TOTAL LAND VALUE - MARKET		382,500
TOTAL MARKET VALUE		509,684
SOH/AGL Deduction		83,430
ASSESSED VALUE		426,254
TOTAL EXEMPTION VALUE	HX HB	51,411
BASE TAXABLE VALUE		374,843
TOTAL JUST VALUE		509,684
NCON VALUE		0
INCOME VALUE		
PREVIOUS YEAR MKT VALUE		415,048

PERMIT NUM	DESCRIPTION	AMT	ISSUED
20100532	H/AC	3,000	03/31/2010
20032746	REMODEL	1,000	03/24/2003
20022000	REPAIR/RRF	4,000	11/21/2002
4821	XFOB	2,300	05/02/1988

SALES DATA

OFF RECORD Number	DATE	TYPE INST	Q U /	V I /	RSN CD	SALE PRICE
2454/1647	4/20/2021	WD	U	I	37	127,500
GRANTOR: DOUGHERTY ROBERT C						
GRANTEE: COVER CHARLES B						
2144/0975	8/31/2017	WD	U	I	37	50,000
GRANTOR: COVER BLAKE						
GRANTEE: DOUGHERTY ROBERT C						

BUILDING NOTES

BUILDING DIMENSIONS

FGR=[YR=1993] W12 S17 UOP=[YR=1993] W9 S5 BAS=[YR=1993] W35 S24 E5 S11 E13 FOP=[YR=1993] E9 N4 W9 S4$ N4 E9 N4 E17 N1 U2 R2 N4 U2 L2 N14 UOP=[YR=1993] E12 N4 W12 S4$ N4 W9$ E9 N5$ S5 E12 N22$ PTR=E15 FSP=[YR=1993] E10 UOP=[YR=1993] E5 S25 W15 N5 E10 N20$ S20 W10 N20$ W15$.

EXTRA FEATURES

LN	OB/XF CODE	DESCRIPTION	BLD	CAP	L	W	UNITS	UT	Adj R	ADJ UNIT PRICE	ORIG COND	YEAR ON	YEAR ACTUAL	Q	% COND	OB/XF MKT VALUE	NOTES
3	1242	WD DECK A	0	100	8	3	24.00	SF	10.00	10.00	100	1982	1982	3	20	48	

LAND DESCRIPTION

TOTAL OB/XF 48

LN	USE CODE	CLS	LAND USE DESCRIPTION	CAP	RD	LOC ZONE	FRONT	DEPTH	TOT LND UTS	UNIT TYPE	DT	DPTH FACT	% COND	TOT ADJ	UNIT PRICE	ADJ UNIT PRICE	LAND VALUE	OTHER ADJUSTMENTS AND NOTES	YEAR	DENSITY	DECL	FRZ	YR	CONSRV
1	000100	C	RES	100	0006	R-1	86.00	154.00	1.00	LT		1.00	1.00	1.50	255,000.00	382,500.00	382,500							

REVIEW DATE 01/01/2023 BY CD Total Acres: 0.00 Total Land Value: 382,500 Market: 0 Agricultural: 0 Common: 382,500 PRINTED 07/09/2026 BY SYS