BLK 253 PT OF LOTS 6 & 7
& PT OF UNDEVELOPED 15TH ST
IN OR 1827/1137

MADDOX KIM L & JAMES T
1409 HIGHLAND DR
FERNANDINA BEACH, FL 32034

2026

00-00-31-1800-0253-0064

NASSAU COUNTY PROPERTY

BUILDING CHARACTERISTICS

ELEMENT	CD	CONSTRUCTION
Exterior Wall	05	AVERAGE 100
Roof Structur	03	GABLE/HIP 100
Roof Cover	03	COMP SHNGL 100
Interior Wall	05	DRYWALL 100
Interior Floo	12	HARDWOOD 60
Interior Floo	14	CARPET 40
Air Condition	03	CENTRAL 100
Heating Type	04	AIR DUCTED 100
Bedrooms		3 100
Bathrooms		3.5 100
Frame	02	WOOD FRAME 100
Stories	1.	1. 100
Units		0 100
BUD8 Adjustme	02	DIST FB 100
Quality	03	Quality Level 03
DOR CODE	0100	SINGLE FAMILY
MAP NUM		MKT AREA 01
NEIGHBORHOOD/LOC	1007.00	

AREA TYPE	TOTAL GROSS AREA	PCT OF BASE	YEAR	TOT ADJ AREA	SUBAREA MARKET VALUE
APT	452	100	2014	452	79,091
BAS	1,990	100	2014	1,990	348,211
DCK	12	10	2014	1	175
DCK	142	10	2014	14	2,450
FGR	552	55	2014	304	53,194
FOP	60	30	2014	18	3,149
FOP	100	30	2014	30	5,250
FOP	271	30	2014	81	14,173
FSP	195	40	2014	78	13,649
STR	40	10	2014	4	700
TOTALS	3,922			2,988	522,842

MARKET ADJUSTMENTS

TYPE	MDL	EFF. AREA	TOT ADJ PTS	EFF. BASE RATE	REPL. COST NEW	AYB	EYB	ECON	FNCT		NORM	% COND
0900	11	2,988	132.5118	184.19	550,360	2014	2014	0	0	0	5.00	95.00

1 SNGL FAM 100% - 2024 Heated Area: 2442 HX Base Yr

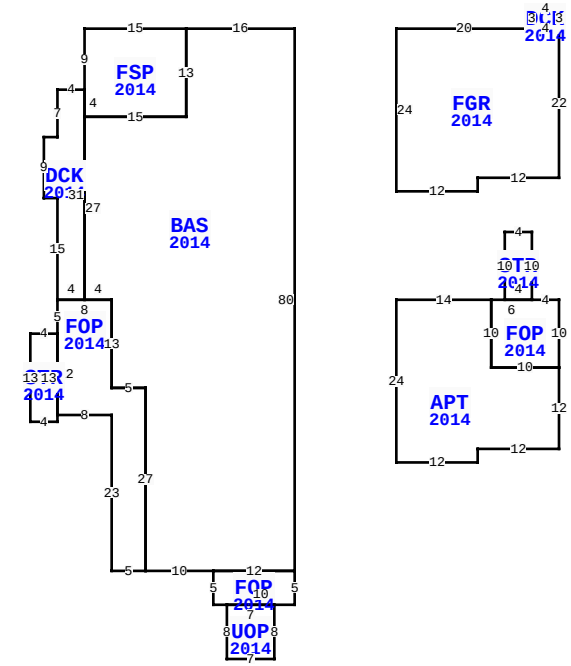

** This building has 12 Sub-Areas

1409 HIGHLAND DR, FERNANDINA BEACH

BLD DATE		LGL DATE	
XF DATE		LAND DATE	05/06/2026 MLU
INC DATE		AG DATE	

VALUATION SUMMARY

VALUATION BY		STANDARD
Tax Group: 2	Tax Dist:	
BUILDING MARKET VALUE		522,842
TOTAL MARKET OB/XF VALUE		19,022
TOTAL LAND VALUE - MARKET		359,575
TOTAL MARKET VALUE		901,439
SOH/AGL Deduction		4,182
ASSESSED VALUE		897,257
TOTAL EXEMPTION VALUE	13	897,257
BASE TAXABLE VALUE		0
TOTAL JUST VALUE		901,439
NCON VALUE		0
INCOME VALUE		
PREVIOUS YEAR MKT VALUE		873,668

PERMIT NUM	DESCRIPTION	AMT	ISSUED
20141521	216'FNC	0	07/12/2014
20132857	NEW CONSTR	12,850	12/20/2013
20132814	NEW CONSTR	1,850	12/13/2013
20132670	NEW CONSTR	327,120	11/22/2013
20132567	DEMOLITION	9,000	11/08/2013
20072227	OTHER	500	12/13/2007

SALES DATA

OFF RECORD Number	DATE	TYPE INST	Q / U	V / I	RSN CD	SALE PRICE
1827/1137	11/08/2012	WD	Q	I	01	275,000
GRANTOR: LANNON ESTATE LLC						
GRANTEE: MADDOX KIM L & JAME						
1760/0235	9/30/2011	TD	U	I	11	100
GRANTOR: LEEPER EMMA L & MARIL						
GRANTEE: LANNON ESTATE LLC						

BUILDING NOTES

BUILDING DIMENSIONS

BAS=[YR=2014] W16 FSP=[YR=2014] W15 S9 DCK=[YR=2014] W4 S7 W2 S9 E2 S15 FOP=[YR=2014] S5 STR=[YR=2014] W4 S13 E4 N13$ S12 E8 S23 E5 N27 W5 N13 W8$ E4 N31 $ S4 E15 N13$ S13 W15 S27 E4 S13 E5 S27 E10 FOP=[YR=2014] S5 E2 UOP=[YR=2014] S8 E7 N8 W7$ E10 N5 W12$ E12 N80$ PTR= E15 FGR=[YR=2014] E20 DCK=[YR=2014] E4 N3 W4 S3$ E4 S22 W12 S2 W12 N24$ W15$ PTR= E15 S40 APT=[YR=2014] E14 FOP=[YR=2014] S10 E10 N10 W4 STR=[YR=2014] N10 W4 S10 E4$ W6$ S10 E10 S12 W12 S2 W12 N24$ W15 N40$.

EXTRA FEATURES

LN	OB/XF CODE	DESCRIPTION	BLD	CAP	L	W	UNITS	UT	Adj R	ADJ UNIT PRICE	ORIG COND	YEAR ON	YEAR ACTUAL	Q	% COND	OB/XF MKT VALUE	NOTES
1	0300	BOAT DCK W	0	100	206	4	824.00	SF	60.00	60.00	100	1999	1999	3	25	12,360	
2	0300	BOAT DCK W	0	100	12	12	144.00	SF	60.00	60.00	100	1999	1999	3	25	2,160	
3	0351	CARPORT MT	0	100	12	12	144.00	SF	6.90	6.90	100	1999	1999	3	20	199	
4	0310	AL GANG WY	0	100	0	0	20.00	LF	115.00	115.00	100	2014	2014	3	55	1,265	
5	0303	FLT DOCK W	0	100	25	10	250.00	SF	39.00	39.00	100	1999	1999	3	25	2,438	
6	0317	DCK PLNG W	0	100	0	0	3.00	UT	1,000.00	1,000.00	100	1999	1999	3	20	600	

LAND DESCRIPTION

TOTAL OB/XF 19,022

LN	USE CODE	CLS	LAND USE DESCRIPTION	CAP	RD	LOC ZONE	FRONT	DEPTH	TOT LND UTS	UNIT TYPE	DT	DPTH FACT	% COND	TOT ADJ	UNIT PRICE	ADJ UNIT PRICE	LAND VALUE	OTHER ADJUSTMENTS AND NOTES	YEAR	DENSITY	DECL	FRZ	YR	CONSRV
1	000131	C	RES CREEK	100	0006	R-1	76.00	135.00	75.70	FF		1.00	1.00	1.00	4,750.00	4,750.00	359,575							

REVIEW DATE 01/01/2023 BY CD Total Acres: 0.00 Total Land Value: 359,575 Market: 0 Agricultural: 0 Common: 359,575 PRINTED 07/09/2026 BY SYS