BLK 216 TRACT B OF LOT 3
IN OR 2040/1958
CITY OF FDNA BEACH S/D OF

WILLIAMS CYNTHIA LYNN
304 S 11TH ST
FERNANDINA BEACH, FL 32034

**2026**

**00-00-31-1800-0216-03B0**

## BUILDING CHARACTERISTICS

| ELEMENT | CD | CONSTRUCTION |
|---|---|---|
| Exterior Wall | 10 | ABOVE AVG 100 |
| Roof Structur | 03 | GABLE/HIP 100 |
| Roof Cover | 03 | COMP SHNGL 100 |
| Interior Wall | 02 | WALL BD/WD 100 |
| Interior Floo | 13 | LVT/LAMNT 50 |
| Interior Floo | 14 | CARPET 50 |
| Air Condition | 03 | CENTRAL 100 |
| Heating Type | 04 | AIR DUCTED 100 |
| Bedrooms | | 3 100 |
| Bathrooms | | 1 100 |
| Frame | 02 | WOOD FRAME 100 |
| Stories | 1. | 1. 100 |
| Units | | 0 100 |
| Occupancy | 00 | NONE 100 |
| Quality | 06 | Quality Level 06 |

DOR CODE 0100 SINGLE FAMILY
MAP NUM | MKT AREA 01
NEIGHBORHOOD/LOC 1009.00

| AREA TYPE | TOTAL GROSS AREA | PCT OF BASE | YEAR | TOT ADJ AREA | SUBAREA MARKET VALUE |
|---|---|---|---|---|---|
| BAS | 1,104 | 100 | 1993 | 1,104 | 109,976 |
| BAS | 154 | 100 | 2022 | 154 | 15,341 |
| BAS | 460 | 100 | 2026 | 460 | 45,823 |
| FGR | 224 | 55 | 2026 | 123 | 12,253 |
| FOP | 52 | 30 | 2022 | 16 | 1,594 |
| FOP | 24 | 30 | 2026 | 7 | 697 |
| FSP | 126 | 40 | 1993 | 50 | 4,981 |
| PTO | 352 | 5 | 2022 | 18 | 1,793 |
| STR | 20 | 10 | 2007 | 2 | 199 |
| TOTALS | 2,516 | | | 1,934 | 192,658 |

## MARKET ADJUSTMENTS

| TYPE | MDL | EFF. AREA | TOT ADJ PTS | EFF. BASE RATE | REPL. COST NEW | AYB | EYB | ECON | FNCT | | NORM | % COND |
|---|---|---|---|---|---|---|---|---|---|---|---|---|
| 0100 | 01 | 1,934 | 103.6840 | 108.87 | 210,555 | 1946 | 2007 | 0 | 0 | 0 | 8.50 | 91.50 |

1 SINGLE FAM 100% - 2017 Heated Area: 1718 HX Base Yr 2017

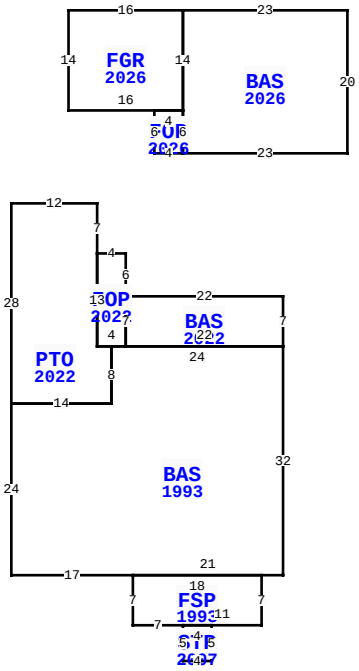


304 S 11TH ST, FERNANDINA BEACH

| | | | |
|---|---|---|---|
| BLD DATE | 04/09/2014 KK | LGL DATE | |
| XF DATE | | LAND DATE | 05/07/2025 MLU |
| INC DATE | | AG DATE | |

## NASSAU COUNTY PROPERTY

PAGE 1 of 1 2

### VALUATION SUMMARY

| | | |
|---|---|---|
| VALUATION BY | | STANDARD |
| Tax Group: 2 | Tax Dist: | |
| BUILDING MARKET VALUE | | 192,658 |
| TOTAL MARKET OB/XF VALUE | | 0 |
| TOTAL LAND VALUE - MARKET | | 151,200 |
| TOTAL MARKET VALUE | | 343,858 |
| SOH/AGL Deduction | | 188,105 |
| ASSESSED VALUE | | 155,753 |
| TOTAL EXEMPTION VALUE | HX HB | 51,411 |
| BASE TAXABLE VALUE | | 104,342 |
| TOTAL JUST VALUE | | 343,858 |
| NCON VALUE | | 0 |
| INCOME VALUE | | |
| PREVIOUS YEAR MKT VALUE | | 352,336 |

| PERMIT NUM | DESCRIPTION | AMT | ISSUED |
|---|---|---|---|
| 20190728 | ADDITION | 72,000 | 03/09/2020 |
| 20110433 | REPAIR/RRF | 4,934 | 03/28/2011 |
| 20071208 | XFOB | 750 | 06/27/2007 |
| 20070576 | REMODEL | 1,850 | 04/11/2007 |
| 20070560 | H/AC | 3,000 | 04/10/2007 |
| 20070329 | FOUNDATION | 23,700 | 02/21/2007 |

## SALES DATA

| OFF RECORD Number | DATE | TYPE INST | Q / U | V / I | RSN CD | SALE PRICE |
|---|---|---|---|---|---|---|
| 2040/1958 | 4/18/2016 | WD | Q | I | 02 | 128,000 |
| GRANTOR: COON JAMES H & MARTHA | | | | | | |
| GRANTEE: WILLIAMS CYNTHIA LY | | | | | | |
| 2040/1956 | 4/18/2016 | QC | U | I | 11 | 100 |
| GRANTOR: COON JAMES H & MARTHA | | | | | | |
| GRANTEE: WILLIAMS CYNTHIA LY | | | | | | |

## BUILDING NOTES

## BUILDING DIMENSIONS

BAS=[YR=1993;ORIG=-38,15] S24 E17 E21 N32 W24 S8 W14 $
PTO=[YR=2022;ORIG=-26,-6] N7 W12 S28 E14 N8 W2 N13 $
BAS=[YR=2022;ORIG=0,0] W22 S7 E22 N7 $
FSP=[YR=1993;ORIG=-21,39] S7 E7 E11 N7 W18 $
FOP=[YR=2022;ORIG=-22,0] N6 W4 S13 E4 N7 $
STR=[YR=2007;ORIG=-14,46] S5 E4 N5 W4 $
FGR=[YR=2026;ORIG=-30,-40] S14 E16 N14 W16 $
BAS=[YR=2026;ORIG=-14,-26] S6 E23 N20 W23 S14 $
FOP=[YR=2026;ORIG=-14,-26] S6 W4 N6 E4 $
.

## EXTRA FEATURES

| LN | OB/XF CODE | DESCRIPTION | BLD | CAP | L | W | UNITS | UT | Adj R | ADJ UNIT PRICE | ORIG COND | YEAR ON | YEAR ACTUAL | Q | % COND | OB/XF MKT VALUE | NOTES |
|---|---|---|---|---|---|---|---|---|---|---|---|---|---|---|---|---|---|

## LAND DESCRIPTION

TOTAL OB/XF 0

| LN | USE CODE | CLS | LAND USE DESCRIPTION | CAP | RD | LOC ZONE | FRONT | DEPTH | TOT LND UTS | UNIT TYPE | DT | DPTH FACT | % COND | TOT ADJ | UNIT PRICE | ADJ UNIT PRICE | LAND VALUE | OTHER ADJUSTMENTS AND NOTES | YEAR | DENSITY | DECL | FRZ | YR | CONSRV |
|---|---|---|---|---|---|---|---|---|---|---|---|---|---|---|---|---|---|---|---|---|---|---|---|---|
| 1 | 000100 | C | RES | 100 | 0006 | R-2 | 56.00 | 100.00 | 56.00 | FF | | 1.00 | 1.00 | 1.00 | 2,700.00 | 2,700.00 | 151,200 | | | | | | | |

REVIEW DATE 01/01/2023 BY CD Total Acres: 0.00 Total Land Value: 151,200 Market: 0 Agricultural: 0 Common: 151,200 PRINTED 07/09/2026 BY SYS