BLOCK 184 PT OF LOTS 3 & 6
ALL OF LOTS 4 & 5 &
BLOCK 185 PT OF LOTS 5 & 6

COCHRAN MARK DENNIS/STEWART FAMILY REVOCABLE TRUST
MAVIS TIRE SUPPLY LLC ATTN: LE, 358 SAW MILL RIVER RD
MILLWOOD, NY 10546

2026

00-00-31-1800-0184-0031

NASSAU COUNTY PROPERTY

BUILDING CHARACTERISTICS

ELEMENT	CD	CONSTRUCTION
Exterior Wall	17	CB STUCCO 60
Exterior Wall	15	CONC BLOCK 40
Roof Structur	09	RIDGE FRME 100
Roof Cover	12	MODULAR MT 100
Interior Wall	01	MINIMUM 60
Interior Wall	04	PLYWOOD 40
Interior Floo	03	CONC FINSH 70
Interior Floo	07	CORK/VTILE 30
Ceiling	03	PART.FIN. 100
Air Condition	01	NONE 100
Heating Type	01	NONE 100
Fixtures		10 100
Frame	03	MASONRY 100
Story Height		15 100
RMS		6 100
Stories	1.	1. 100
Units		0 100
BUD8 Adjustme	05	DIST 1A 100
Quality	00	QUALITY Level 03
DOR CODE	2500	REPAIR SERVICE
MAP NUM		MKT AREA 02
NEIGHBORHOOD/LOC	1095.00	

AREA TYPE	TOTAL GROSS AREA	PCT OF BASE	YEAR	TOT ADJ AREA	SUBAREA MARKET VALUE
AOF	361	100	1993	361	12,763
BAS	1,950	100	1993	1,950	68,943
CAN	900	30	1993	270	9,546
CAN	360	30	2025	108	3,819
SDA	1,286	110	1993	1,415	50,028
SFB	2,153	80	1993	1,722	60,882
TOTALS	7,010			5,826	205,978

MARKET ADJUSTMENTS

TYPE	MDL	EFF. AREA	TOT ADJ PTS	EFF. BASE RATE	REPL. COST NEW	AYB	EYB	ECON	FNCT		NORM	% COND
2501	04	5,826	77.9185	70.71	411,956	1977	1980	0	0	0	50.00	50.00

1 SERV SHOP 0% - 0 Heated Area: 5319 HX Base Yr

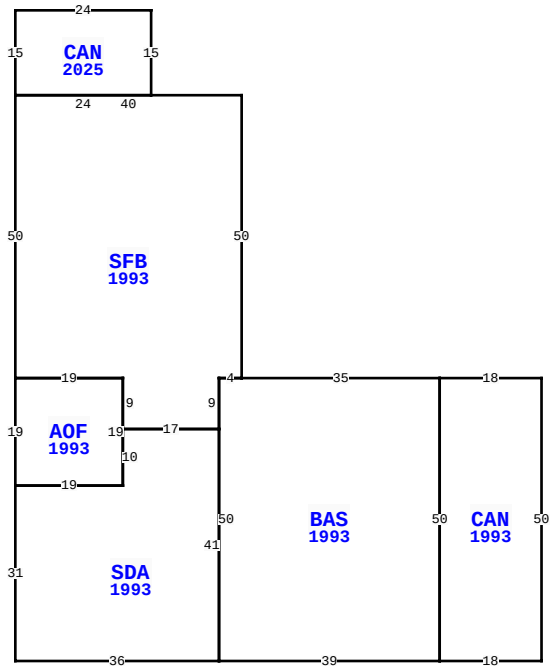

1260 S 8TH ST, FERNANDINA BEACH

BLD DATE	12/20/2019	KKA	LGL DATE	
XF DATE	12/20/2019	KKA	LAND DATE	04/24/2026 MLU
INC DATE			AG DATE	

VALUATION SUMMARY

VALUATION BY	STANDARD
Tax Group: 8	Tax Dist:
BUILDING MARKET VALUE	205,978
TOTAL MARKET OB/XF VALUE	46,771
TOTAL LAND VALUE - MARKET	1,247,540
TOTAL MARKET VALUE	1,500,289
SOH/AGL Deduction	795,294
ASSESSED VALUE	704,995
TOTAL EXEMPTION VALUE	0
BASE TAXABLE VALUE	704,995
TOTAL JUST VALUE	1,500,289
NCON VALUE	0
INCOME VALUE	
PREVIOUS YEAR MKT VALUE	1,177,317

PERMIT NUM	DESCRIPTION	AMT	ISSUED
B996146	XFOB	4,000	07/16/1999

SALES DATA

OFF RECORD Number	DATE	TYPE INST	Q U	V I	RSN CD	SALE PRICE
2458/1178	1/19/2021	QC	U	I	11	100
GRANTOR: STEWART STANLEY W & M						
GRANTEE: STEWART FAMILY REVO						
0869/0010	2/23/1999	QC	Q	I	01	32,500
GRANTOR: COCHRAN ALVIE						
GRANTEE: COCHRAN MARK DENNIS						

BUILDING NOTES

BUILDING DIMENSIONS

SFB=[YR=1993;ORIG=-53,0] N50 W40 S50 E19 S9 E17 N9 E4 $
BAS=[YR=1993;ORIG=-18,0] W35 W4 S50 E39 N50 $
SDA=[YR=1993;ORIG=-93,19] S31 E36 N41 W17 S10 W19 $
CAN=[YR=1993;ORIG=0,0] W18 S50 E18 N50 $
AOF=[YR=1993;ORIG=-93,0] S19 E19 N19 W19 $
CAN=[YR=2025;ORIG=-93,-50] N15 E24 S15 W24 $
.

EXTRA FEATURES

LN	OB/XF CODE	DESCRIPTION	BLD	CAP	L	W	UNITS	UT	Adj R	ADJ UNIT PRICE	ORIG COND	YEAR ON	YEAR ACTUAL	Q	% COND	OB/XF MKT VALUE	NOTES
1	0803	ASPHALT C	0	0	0	0	7,650.00	SF	2.00	2.00	100	1980	1980	3	50	7,650	
2	0430	CL FNC 6B	0	0	0	0	609.00	LF	9.70	9.70	100	1977	1977	3	20	1,181	
3	0803	ASPHALT C	0	0	0	0	18,200.00	SF	2.00	2.00	100	1990	1990	3	50	18,200	
4	0402	CONC BUMPE	0	0	0	0	5.00	UT	25.00	25.00	100	1977	1977	3	36	45	
5	0812	CONCRETE C	0	0	58	40	2,320.00	SF	4.00	4.00	100	1999	1999	3	73	6,774	
6	0978	SECURTY LT	0	0	0	0	3.00	UT	450.00	450.00	100	1977	1977	3	20	270	
7	1089	HYDRL RAMP	0	0	0	0	4.00	UT	5,500.00	5,500.00	100	1977	1977	3	50	11,000	
8	0810	CONCRETE A	0	0	75	6	450.00	SF	6.50	6.50	100	1977	1977	3	26	761	
9	0810	CONCRETE A	0	0	35	12	420.00	SF	6.50	6.50	100	1977	1977	3	26	710	
10	0465	FNC GT 15'	0	0	0	0	2.00	UT	450.00	450.00	100	1977	1977	3	20	180	

TOTAL OB/XF 46,771

LAND DESCRIPTION

LN	USE CODE	CLS	LAND USE DESCRIPTION	CAP	RD	LOC ZONE	FRONT	DEPTH	TOT LND UTS	UNIT TYPE	DT	DPTH FACT	% COND	TOT ADJ	UNIT PRICE	ADJ UNIT PRICE	LAND VALUE	OTHER ADJUSTMENTS AND NOTES	YEAR	DENSITY	DECL	FRZ	YR	CONSRV
1	002500	C	SRVC SHOPS	0	0003	CI	200.00	325.00	62,377.00	SF		1.00	1.00	1.00	20.00	20.00	1,247,540							

REVIEW DATE 01/01/2023 BY CD Total Acres: 1.43 Total Land Value: 1,247,540 Market: 0 Agricultural: 0 Common: 1,247,540 PRINTED 07/09/2026 BY SYS