BLOCK 39 LOT N1/2 OF 2
IN OR 2002/436
CITY OF FDNA BEACH

GRANTHAM WENDY LOU
212 S 6TH ST
FERNANDINA BEACH, FL 32034

2026

00-00-31-1800-0039-0021

BUILDING CHARACTERISTICS

ELEMENT	CD	CONSTRUCTION
Exterior Wall	10	ABOVE AVG 100
Roof Structur	08	IRREGULAR 100
Roof Cover	03	COMP SHNGL 100
Interior Wall	05	DRYWALL 100
Interior Floo	12	HARDWOOD 60
Interior Floo	14	CARPET 40
Air Condition	03	CENTRAL 100
Heating Type	04	AIR DUCTED 100
Bedrooms		3 100
Bathrooms		2 100
Frame	02	WOOD FRAME 100
Stories	2.	2. 100
Units		0 100
BUD8 Adjustme	02	DIST FB 100
Occupancy	00	NONE 100
Quality	06	Quality Level 06
DOR CODE	0100	SINGLE FAMILY
MAP NUM		MKT AREA 01
NEIGHBORHOOD/LOC	1005.00	

AREA TYPE	TOTAL GROSS AREA	PCT OF BASE	YEAR	TOT ADJ AREA	SUBAREA MARKET VALUE
BAL	60	15	2015	9	1,976
BAS	1,555	100	1993	1,555	341,293
BAS	70	100	1998	70	15,364
FUS	426	100	1993	426	93,499
FUS	465	100	1998	465	102,059
UOP	256	20	1993	51	11,194
UOP	60	20	2015	12	2,634
UST	24	45	1993	11	2,415
TOTALS	2,916			2,599	570,431

MARKET ADJUSTMENTS

TYPE	MDL	EFF. AREA	TOT ADJ PTS	EFF. BASE RATE	REPL. COST NEW	AYB	EYB	ECON	FNCT		NORM	% COND
0500	11	2,599	150.2496	249.41	648,217	1897	2000	0	0	0	12.00	88.00

1 SFR CUST 100% - 2016 Heated Area: 2516 HX Base Yr 2016

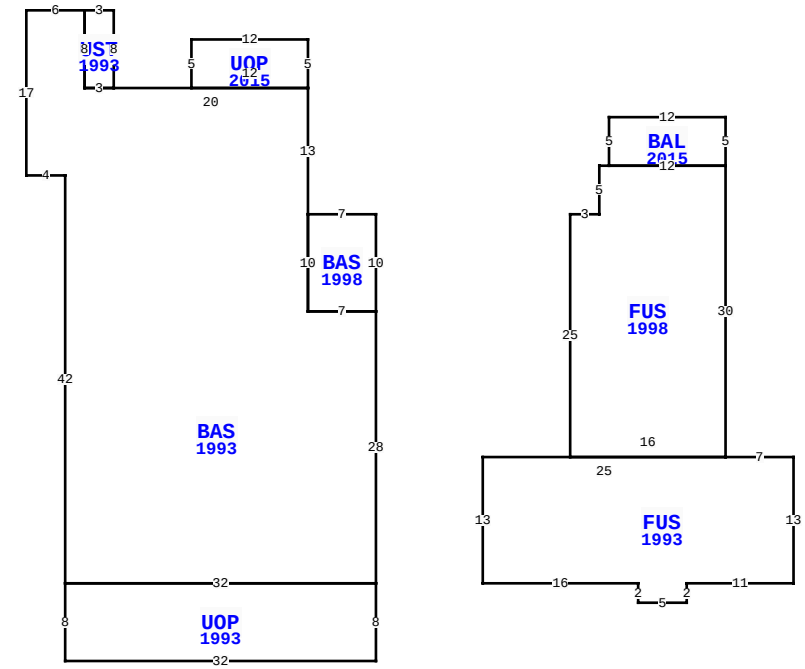

212 S 6TH ST, FERNANDINA BEACH

BLD DATE		LGL DATE	
XF DATE		LAND DATE	05/05/2026 MLU
INC DATE		AG DATE	

NASSAU COUNTY PROPERTY

PAGE 1 of 1 2

VALUATION SUMMARY

VALUATION BY		STANDARD
Tax Group: 2	Tax Dist:	
BUILDING MARKET VALUE		570,431
TOTAL MARKET OB/XF VALUE		3,461
TOTAL LAND VALUE - MARKET		275,000
TOTAL MARKET VALUE		848,892
SOH/AGL Deduction		434,290
ASSESSED VALUE		414,602
TOTAL EXEMPTION VALUE	HX HB WX	56,411
BASE TAXABLE VALUE		358,191
TOTAL JUST VALUE		848,892
NCON VALUE		0
INCOME VALUE		
PREVIOUS YEAR MKT VALUE		772,890

PERMIT NUM	DESCRIPTION	AMT	ISSUED
20121675	RE-ROOF	3,500	08/16/2012
20121622	H/AC	3,500	08/09/2012
20121275	H/AC	5,000	06/27/2012
984285	BATHROOM ADDITION	0	09/15/1998
984204	PLUMBING FOR RESI	0	08/24/1998
984033	REMODEL	53,000	01/01/1998

SALES DATA

OFF RECORD Number	DATE	TYPE INST	Q U	V I	RSN CD	SALE PRICE
2002/0436	8/27/2015	WD	Q	I	02	485,000
GRANTOR: CLARK FRANCES &						
GRANTEE: GRANTHAM JAMES HOLM						
0821/0218	1/30/1998	WD	U	I		127,000
GRANTOR: ALLAN ANDREW JOHN & L						
GRANTEE: CLARK FRANCES & PAT						

BUILDING NOTES

BUILDING DIMENSIONS

BAS=[YR=1998] W7 BAS=[YR=1993] N13 UOP=[YR=2015] N5 W12 S5 E12$ W20 UST=[YR=1993] N8 W3 S8 E3 $ W3 N8 W6 S17 E4 S42 UOP=[YR=1993] S8 E32 N8 W32 $ E32 N28 W7 N10 $ S10 E7 N10 $ PTR= E20 FUS=[YR=1998] E3 N5 E1 BAL=[YR=2015] N5 E12 S5 W12$ E12 S30 FUS=[YR=1993] E7 S13 W11S2 W5 N2 W16 N13 E25 $ W16 N25$ W20 $.

EXTRA FEATURES

LN	OB/XF CODE	DESCRIPTION	BLD	CAP	L	W	UNITS	UT	Adj R	ADJ UNIT PRICE	ORIG COND	YEAR ON	YEAR ACTUAL	Q	% COND	OB/XF MKT VALUE	NOTES
1	0510	GARAGE WD-	0	100	17	20	340.00	SF	38.50	38.50	100	1998	1998	3	24	3,142	
6	1076	TRELLIS A	0	100	20	5	100.00	SF	3.75	3.75	100	1998	1998	3	85	319	

LAND DESCRIPTION

TOTAL OB/XF 3,461

LN	USE CODE	CLS	LAND USE DESCRIPTION	CAP	RD	LOC ZONE	FRONT	DEPTH	TOT LND UTS	UNIT TYPE	DT	DPTH FACT	% COND	TOT ADJ	UNIT PRICE	ADJ UNIT PRICE	LAND VALUE	OTHER ADJUSTMENTS AND NOTES	YEAR	DENSITY	DECL	FRZ	YR	CONSRV
1	000100	C	RES	100	0003	R-2	50.00	100.00	50.00	FF		1.00	1.00	1.00	5,500.00	5,500.00	275,000							

REVIEW DATE 01/01/2023 BY CD Total Acres: 0.00 Total Land Value: 275,000 Market: 0 Agricultural: 0 Common: 275,000 PRINTED 07/09/2026 BY SYS