BLOCK 38 LOT N 371/2 FT OF 2
IN OR 1659/1933
CITY OF FDNA BEACH

STOCKARD JERRY R & MARY C
110 S 6TH ST
FERNANDINA BEACH, FL 32034

2026

00-00-31-1800-0038-0021

NASSAU COUNTY PROPERTY

BUILDING CHARACTERISTICS

ELEMENT	CD	CONSTRUCTION
Exterior Wall	10	ABOVE AVG 100
Roof Structur	03	GABLE/HIP 100
Roof Cover	03	COMP SHNGL 100
Interior Wall	05	DRYWALL 100
Interior Floo	12	HARDWOOD 100
Air Condition	03	CENTRAL 100
Heating Type	04	AIR DUCTED 100
Bedrooms		3 100
Bathrooms		2 100
Frame	02	WOOD FRAME 100
Stories	1.5	1.5 100
Units		0 100
BUD8 Adjustme	02	DIST FB 100
Occupancy	00	NONE 100
Quality	04	Quality Level 04

DOR CODE 0100 SINGLE FAMILY
MAP NUM | MKT AREA 01
NEIGHBORHOOD/LOC 1005.00

AREA TYPE	TOTAL GROSS AREA	PCT OF BASE	YEAR	TOT ADJ AREA	SUBAREA MARKET VALUE
BAS	1,190	100	1993	1,190	162,985
FOP	24	30	1993	7	958
FOP	72	30	1993	22	3,013
FOP	84	30	1993	25	3,424
FUS	902	100	1993	902	123,540
USP	80	30	2009	24	3,287
TOTALS	2,352			2,170	297,208

MARKET ADJUSTMENTS

TYPE	MDL	EFF. AREA	TOT ADJ PTS	EFF. BASE RATE	REPL. COST NEW	AYB	EYB	ECON	FNCT		NORM	% COND
0900	01	2,170	115.2480	160.19	347,612	1900	1995	0	0	0	14.50	85.50

1 SNGL FAM 100% - 2010 Heated Area: 2092 HX Base Yr 2010

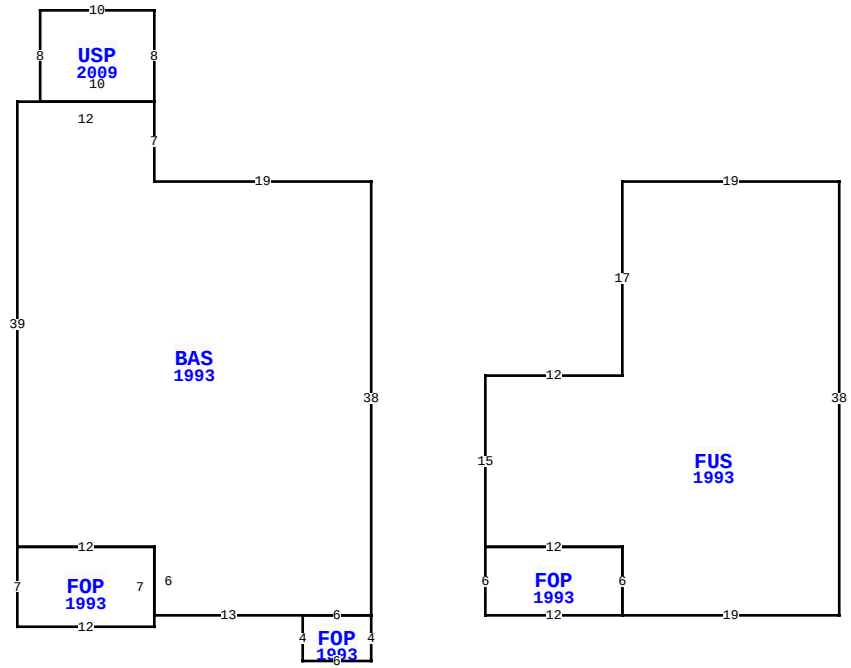

110 S 6TH ST, FERNANDINA BEACH

BLD DATE		LGL DATE	
XF DATE		LAND DATE	05/05/2026 MLU
INC DATE		AG DATE	

VALUATION SUMMARY

VALUATION BY		STANDARD
Tax Group: 2	Tax Dist:	
BUILDING MARKET VALUE		297,208
TOTAL MARKET OB/XF VALUE		942
TOTAL LAND VALUE - MARKET		209,000
TOTAL MARKET VALUE		507,150
SOH/AGL Deduction		266,579
ASSESSED VALUE		240,571
TOTAL EXEMPTION VALUE	HX HB	51,411
BASE TAXABLE VALUE		189,160
TOTAL JUST VALUE		507,150
NCON VALUE		0
INCOME VALUE		
PREVIOUS YEAR MKT VALUE		469,477

PERMIT NUM	DESCRIPTION	AMT	ISSUED
20120352	RE-R00F	9,205	03/05/2012
20090580	SEWER LINE REPLAC	9,000	05/11/2009
20032598	METER CAN	1,000	02/27/2003
20032533	REROOF FLAT ROOF	1,000	02/18/2003
20011539	ROT/SINDING/FENCE	1,000	07/09/2001
20011423	SIDING REPLACEMEN	2,500	06/22/2001

SALES DATA

OFF RECORD Number	DATE	TYPE INST	Q U /	V I /	RSN CD	SALE PRICE
1659/1933	1/22/2010	QC	U	I	11	100
GRANTOR: BREWER STEPHEN M & MA						
GRANTEE: STOCKARD JERRY R &						
0994/1912	6/29/2001	WD	Q	I		152,500
GRANTOR: LUCE ALEC E Y						
GRANTEE: BREWER STEPHEN M &						

BUILDING NOTES

BUILDING DIMENSIONS

BAS=[YR=1993] W19 N7 USP=[YR=2009] N8 W10 S8 E10 $ W12 S39 FOP=[YR=1993] S7 E12 N7 W12 $ E12 S6 E13 FOP=[YR=1993] S4 E6 N4 W6 $ E6 N38 $ PTR= E10S17 FUS=[YR=1993] E12 N17 E19 S38 W19 FOP=[YR=1993] W12 N6 E12 S6 $ N6 W12 N15 $ N17W10 $
.

EXTRA FEATURES

LN	OB/XF CODE	DESCRIPTION	BLD	CAP	L	W	UNITS	UT	Adj R	ADJ UNIT PRICE	ORIG COND	YEAR ON	YEAR ACTUAL	Q	% COND	OB/XF MKT VALUE	NOTES
1	0504	FP-ELECTRI	0	100	0	0	1.00	UT	2,000.00	2,000.00	100	1960	1960	3	20	400	
2	0819	CONC 12"	0	100	11	2	22.00	SF	9.50	9.50	100	1960	1960	3	20	42	
5	1242	WD DECK A	0	100	10	10	100.00	SF	10.00	10.00	100	2013	2013	3	50	500	

LAND DESCRIPTION

TOTAL OB/XF 942

LN	USE CODE	CLS	LAND USE DESCRIPTION	CAP	RD	LOC ZONE	FRONT	DEPTH	TOT LND UTS	UNIT TYPE	DT	DPTH FACT	% COND	TOT ADJ	UNIT PRICE	ADJ UNIT PRICE	LAND VALUE	OTHER ADJUSTMENTS AND NOTES	YEAR	DENSITY	DECL	FRZ	YR	CONSRV
1	000100	C	RES	100	0003	R-2	38.00	100.00	38.00	FF		1.00	1.00	1.00	5,500.00	5,500.00	209,000							

REVIEW DATE 01/01/2023 BY CD Total Acres: 0.00 Total Land Value: 209,000 Market: 0 Agricultural: 0 Common: 209,000 PRINTED 07/09/2026 BY SYS