BLOCK 30 LOTS 12 & 13
IN OR 914/1990 & OR 929/171
CITY OF FDNA BEACH

FIRST PRESBYTERIAN CHURCH OF FERNANDINA BEACH INC
9 NORTH 6TH ST
FERNANDINA BEACH, FL 32034

2026

00-00-31-1800-0030-0120

NASSAU COUNTY PROPERTY

BUILDING CHARACTERISTICS

ELEMENT	CD	CONSTRUCTION
Exterior Wall	10	ABOVE AVG 100
Roof Structur	04	WOOD TRUSS 100
Roof Cover	03	COMP SHNGL 100
Interior Wall	03	PLASTER 100
Interior Floo	09	PINE WOOD 80
Interior Floo	14	CARPET 20
Air Condition	03	CENTRAL 100
Heating Type	04	AIR DUCTED 100
Bedrooms		3 100
Bathrooms		2 100
Frame	02	WOOD FRAME 100
Stories	1.	1. 100
Units		1 100
BUD8 Adjustme	02	DIST FB 100
Occupancy	00	NONE 100
Quality	04	Quality Level 04
DOR CODE	7100	CHURCHES
MAP NUM		MKT AREA 01
NEIGHBORHOOD/LOC	1005.00	

AREA TYPE	TOTAL GROSS AREA	PCT OF BASE	YEAR	TOT ADJ AREA	SUBAREA MARKET VALUE
BAS	2,173	100	1993	2,173	289,915
FOP	42	30	1993	13	1,734
STP	8	10	2014	1	134
TOTALS	2,223			2,187	291,782

MARKET ADJUSTMENTS

TYPE	MDL	EFF. AREA	TOT ADJ PTS	EFF. BASE RATE	REPL. COST NEW	AYB	EYB	ECON	FNCT		NORM	% COND
0900	01	2,187	109.0740	151.61	331,571	1860	2000	0	0	0	12.00	88.00

1 SNGL FAM 0% - 0 Heated Area: 2173 HX Base Yr

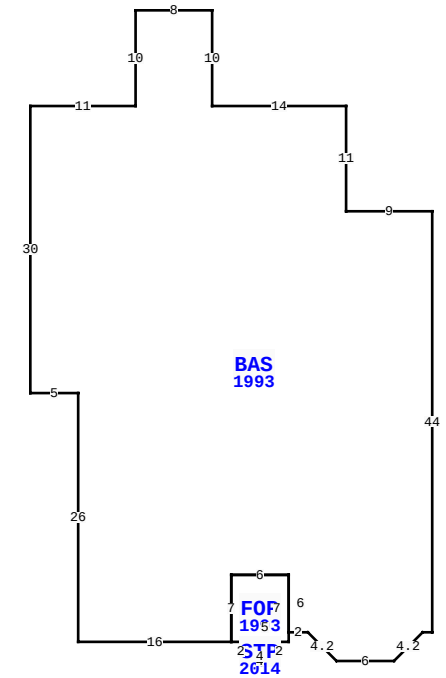

15 N 6TH ST, FERNANDINA BEACH

BLD DATE	01/07/2019	KK	LGL DATE		
XF DATE	01/07/2019	KK	LAND DATE	05/06/2026	MLU
INC DATE			AG DATE		

VALUATION SUMMARY

VALUATION BY		STANDARD
Tax Group: 2	Tax Dist:	
BUILDING MARKET VALUE		576,864
TOTAL MARKET OB/XF VALUE		16,370
TOTAL LAND VALUE - MARKET		650,000
TOTAL MARKET VALUE		1,243,234
SOH/AGL Deduction		450,675
ASSESSED VALUE		792,559
TOTAL EXEMPTION VALUE	02	792,559
BASE TAXABLE VALUE		0
TOTAL JUST VALUE		1,243,234
NCON VALUE		0
INCOME VALUE		
PREVIOUS YEAR MKT VALUE		1,167,633

PERMIT NUM	DESCRIPTION	AMT	ISSUED
20180487	REMODEL	83,000	02/12/2018
20131470	REPAIR/RRF	5,500	06/25/2013
20122326	REPAIR/RRF	7,904	11/16/2012
20111342	OTHER	55,000	08/11/2011
20110504	DEMOLITION	50	04/06/2011
20100297	OTHER	2,000	02/16/2010

SALES DATA

OFF RECORD Number	DATE	TYPE INST	Q U /	V I /	RSN CD	SALE PRICE
0914/1990	1/11/2000	TD	Q	I		190,000
GRANTOR: LEEPER JOE T & ALBERT						
GRANTEE: FIRST PRESBYTERIAN						
0676/0095	2/25/1993	QC	Q	I	01	100
GRANTOR: LEEPER JOE & ALBERTA						
GRANTEE: LEEPER J & A CO-TRT						

BUILDING NOTES

BUILDING DIMENSIONS

BAS=[YR=1993] W9 N11 W14 N10 W8 S10 W11 S30 E5 S26 E16
FOP=[YR=1993] E1 STP=[YR=2014] S2 E4 N2 W4$ E5 N7 W6 S7$ N7
E6 S6 E2 D3 R3 E6 U3 R3 E1 N44$.

EXTRA FEATURES

LN	OB/XF CODE	DESCRIPTION	BLD	CAP	L	W	UNITS	UT	Adj R	ADJ UNIT PRICE	ORIG COND	YEAR ON	YEAR ACTUAL	Q	% COND	OB/XF MKT VALUE	NOTES
1	0504	FP-ELECTRI	0	0	0	0	1.00	UT	2,000.00	2,000.00	100	1910	1910	3	20	400	
2	0810	CONCRETE A	0	0	42	8	336.00	SF	6.50	6.50	100	2000	2000	3	75	1,638	
3	0810	CONCRETE A	0	0	14	3	42.00	SF	6.50	6.50	100	2018	2018	3	96	262	
4	0855	CONC PAVER	0	0	0	0	962.00	SF	10.00	10.00	100	2009	2009	3	88	8,466	
5	0810	CONCRETE A	0	0	0	0	140.00	SF	6.50	6.50	100	2000	2000	3	75	683	
6	0810	CONCRETE A	0	0	0	0	317.00	SF	6.50	6.50	100	2000	2000	3	75	1,545	
7	0500	FP-PRE FAB	0	0	0	0	1.00	UT	3,500.00	3,500.00	100	1910	1910	3	20	700	
8	0445	BOX FNC 5'	0	0	0	0	5.00	LF	8.10	8.10	100	2000	2000	3	20	8	
9	0463	FENCE GATE	0	0	0	0	1.00	UT	300.00	300.00	100	2000	2000	3	45	135	
10	0461	IRON FENCE	0	0	66	3	198.00	SF	8.50	8.50	100	1970	1970	3	30	505	

TOTAL OB/XF 14,342

LAND DESCRIPTION

LN	USE CODE	CLS	LAND USE DESCRIPTION	CAP	RD	LOC ZONE	FRONT	DEPTH	TOT LND UTS	UNIT TYPE	DT	DPTH FACT	% COND	TOT ADJ	UNIT PRICE	ADJ UNIT PRICE	LAND VALUE	OTHER ADJUSTMENTS AND NOTES	YEAR	DENSITY	DECL	FRZ	YR	CONSRV
1	007100	C	CHURCH	0	0003	C-3	100.00	100.00	10,000.00	SF		1.00	1.00	1.00	65.00	65.00	650,000							

REVIEW DATE 01/01/2023 BY CD Total Acres: 0.00 Total Land Value: 650,000 Market: 0 Agricultural: 0 Common: 650,000 PRINTED 07/09/2026 BY SYS

BLOCK 30 LOTS 12 & 13
IN OR 914/1990 & OR 929/171
CITY OF FDNA BEACH

FIRST PRESBYTERIAN CHURCH OF FERNANDINA BEACH INC
9 NORTH 6TH ST
FERNANDINA BEACH, FL 32034

2026

00-00-31-1800-0030-0120

BUILDING CHARACTERISTICS

ELEMENT	CD	CONSTRUCTION
Exterior Wall	10	ABOVE AVG 100
Roof Structur	04	WOOD TRUSS 100
Roof Cover	03	COMP SHNGL 100
Interior Wall	03	PLASTER 100
Interior Floo	12	HARDWOOD 90
Interior Floo	14	CARPET 10
Air Condition	03	CENTRAL 100
Heating Type	04	AIR DUCTED 100
Bedrooms		3 100
Bathrooms		2 100
Frame	02	WOOD FRAME 100
Stories	1.5	1.5 100
Units		1 100
Occupancy	00	NONE 100
Quality	04	Quality Level 04
DOR CODE	7100	CHURCHES
MAP NUM		MKT AREA 01
NEIGHBORHOOD/LOC	1005.00	

AREA TYPE	TOTAL GROSS AREA	PCT OF BASE	YEAR	TOT ADJ AREA	SUBAREA MARKET VALUE
BAS	1,339	100	1993	1,339	194,659
DCK	32	10	2014	3	436
FOP	140	30	1993	42	6,105
FUS	576	100	1993	576	83,736
STP	12	10	2014	1	145
TOTALS	2,099			1,961	285,082

MARKET ADJUSTMENTS

TYPE	MDL	EFF. AREA	TOT ADJ PTS	EFF. BASE RATE	REPL. COST NEW	AYB	EYB	ECON	FNCT		NORM	% COND
0900	01	1,961	118.8495	165.20	323,957	1857	2000	0	0	0	12.00	88.00

2 SNGL FAM 0% - 0 Heated Area: 1915 HX Base Yr

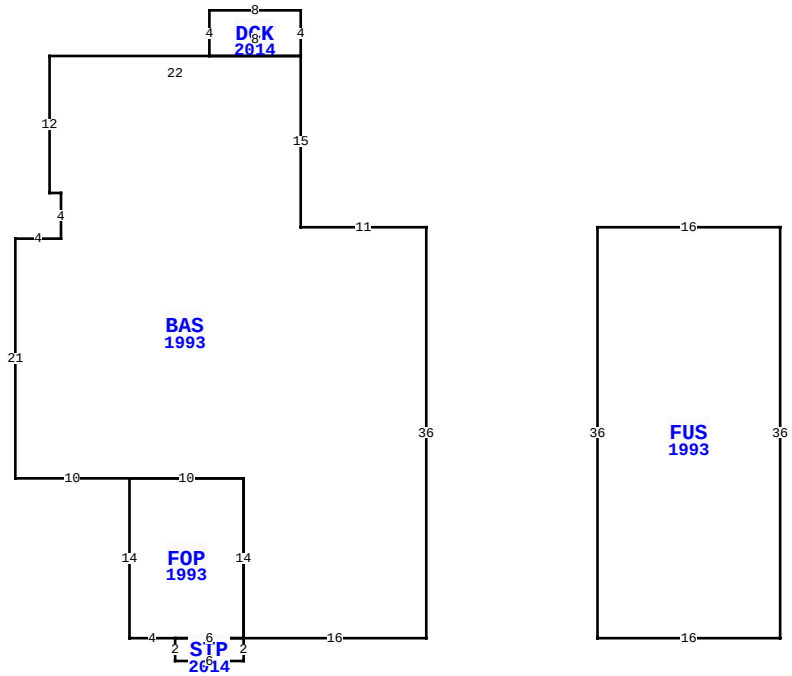

BLD DATE	01/07/2019	KK	LGL DATE
XF DATE	01/07/2019	KK	LAND DATE 05/06/2026 MLU
INC DATE			AG DATE

15 N 6TH ST, FERNANDINA BEACH

NASSAU COUNTY PROPERTY

PAGE 2 of 2 2

VALUATION SUMMARY

VALUATION BY		STANDARD
Tax Group: 2	Tax Dist:	
BUILDING MARKET VALUE		576,864
TOTAL MARKET OB/XF VALUE		16,370
TOTAL LAND VALUE - MARKET		650,000
TOTAL MARKET VALUE		1,243,234
SOH/AGL Deduction		450,675
ASSESSED VALUE		792,559
TOTAL EXEMPTION VALUE	02	792,559
BASE TAXABLE VALUE		0
TOTAL JUST VALUE		1,243,234
NCON VALUE		0
INCOME VALUE		
PREVIOUS YEAR MKT VALUE		1,167,633

PERMIT NUM	DESCRIPTION	AMT	ISSUED
20081161	H/AC	5,000	07/16/2008
20080270	REPAIR/RRF	3,399	02/22/2008
20071356	H/AC	3,500	07/23/2007
20071324	REPAIR/RRF	4,600	07/17/2007
20033503	REPAIR/RRF	5,000	07/16/2003

SALES DATA

OFF RECORD Number	DATE	TYPE INST	Q U	V I	RSN CD	SALE PRICE
0914/1990	1/11/2000	TD	Q	I		190,000
GRANTOR: LEEPER JOE T & ALBERT						
GRANTEE: FIRST PRESBYTERIAN						
0676/0095	2/25/1993	QC	Q	I	01	100
GRANTOR: LEEPER JOE & ALBERTA						
GRANTEE: LEEPER J & A CO-TRT						

BUILDING NOTES

BUILDING DIMENSIONS

BAS=[YR=1993] W11 N15 DCK=[YR=2014] N4 W8 S4 E8$ W22 S12 E1 S4 W4 S21 E10 FOP=[YR=1993] S14 E4 STP=[YR=2014] S2 E6 N2 W6$ E6 N14 W10$ E10 S14 E16 N36$ PTR= E15 FUS=[YR=1993] E16 S36 W16 N36$ W15$.

EXTRA FEATURES

LN	OB/XF CODE	DESCRIPTION	BLD	CAP	L	W	UNITS	UT	Adj R	ADJ UNIT PRICE	ORIG COND	YEAR ON	YEAR ACTUAL	Q	% COND	OB/XF MKT VALUE	NOTES
11	1242	WD DECK A	0	0	0	0	274.00	SF	10.00	10.00	100	2018	2018	3	74	2,028	

LAND DESCRIPTION

TOTAL OB/XF 2,028

LN	USE CODE	CLS	LAND USE DESCRIPTION	CAP	RD	LOC ZONE	FRONT	DEPTH	TOT LND UTS	UNIT TYPE	DT	DPTH FACT	% COND	TOT ADJ	UNIT PRICE	ADJ UNIT PRICE	LAND VALUE	OTHER ADJUSTMENTS AND NOTES	YEAR	DENSITY	DECL	FRZ	YR	CONSRV

REVIEW DATE 01/01/2023 BY CD Total Acres: 0.00 Total Land Value: 650,000 Market: 0 Agricultural: 0 Common: 650,000 PRINTED 07/09/2026 BY SYS