BLK 23 LOT 14 & E 30FT OF LOT
15 & E 80FT LOT 13
IN OR 2420/403

NASSAU TRUST LLC
P O BOX 52
FERNANDINA BEACH, FL 32035

2026

00-00-31-1800-0023-0130

NASSAU COUNTY PROPERTY

BUILDING CHARACTERISTICS

ELEMENT	CD	CONSTRUCTION
Exterior Wall	10	ABOVE AVG 100
Roof Structur	08	IRREGULAR 100
Roof Cover	03	COMP SHNGL 100
Interior Wall	03	PLASTER 50
Interior Wall	05	DRYWALL 50
Interior Floo	12	HARDWOOD 75
Interior Floo	11	CLAY TILE 25
Air Condition	03	CENTRAL 100
Heating Type	04	AIR DUCTED 100
Bedrooms		4 100
Bathrooms		4 100
Frame	02	WOOD FRAME 100
Stories	2.	2. 100
Units		1 100
BUD8 Adjustme	02	DIST FB 100
Occupancy	00	NONE 100
Quality	06	Quality Level 06
DOR CODE	0100	SINGLE FAMILY
MAP NUM		MKT AREA 01
NEIGHBORHOOD/LOC	1002.00	

AREA TYPE	TOTAL GROSS AREA	PCT OF BASE	YEAR	TOT ADJ AREA	SUBAREA MARKET VALUE
BAS	1,649	100	1993	1,649	377,841
FDG	540	60	1993	324	74,239
FOP	9	30	1993	3	687
FOP	510	30	1993	153	35,057
FOP	9	30	2008	3	687
FOP	90	30	2008	27	6,186
FOP	510	30	2008	153	35,057
FSP	88	40	2008	35	8,019
FST	32	55	1993	18	4,125
FUS	1,575	100	1993	1,575	360,886
TOTALS	5,072			3,946	904,160

MARKET ADJUSTMENTS

TYPE	MDL	EFF. AREA	TOT ADJ PTS	EFF. BASE RATE	REPL. COST NEW	AYB	EYB	ECON	FNCT		NORM	% COND
0500	01	3,946	123.6825	246.38	972,215	1856	2010	0	0	0	7.00	93.00

1 SFR CUST 0% - 0 Heated Area: 3224 HX Base Yr

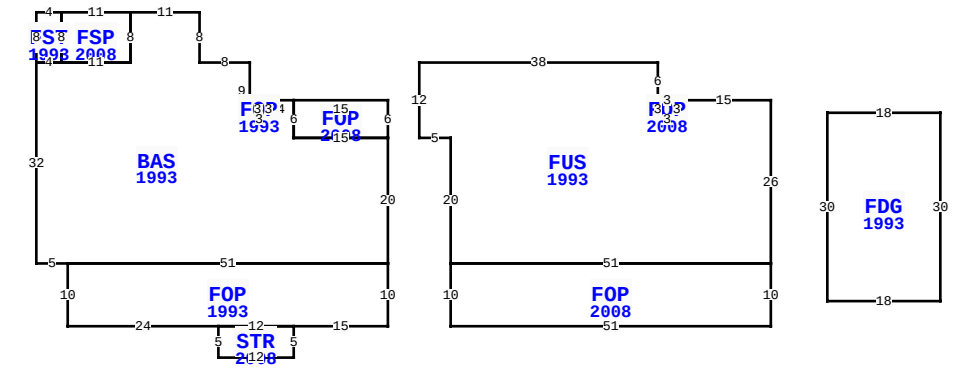

** This building has 11 Sub-Areas

415 CENTRE ST, FERNANDINA BEACH

BLD DATE		LGL DATE	
XF DATE		LAND DATE	05/04/2026 MLU
INC DATE		AG DATE	

VALUATION SUMMARY

VALUATION BY	STANDARD
Tax Group: 2	Tax Dist:
BUILDING MARKET VALUE	904,160
TOTAL MARKET OB/XF VALUE	0
TOTAL LAND VALUE - MARKET	1,800,000
TOTAL MARKET VALUE	2,704,160
SOH/AGL Deduction	1,146,823
ASSESSED VALUE	1,557,337
TOTAL EXEMPTION VALUE	0
BASE TAXABLE VALUE	1,557,337
TOTAL JUST VALUE	2,704,160
NCON VALUE	0
INCOME VALUE	
PREVIOUS YEAR MKT VALUE	2,375,723

PERMIT NUM	DESCRIPTION	AMT	ISSUED
20210209	REMODEL	45,000	08/11/2021
20210180	XFOB - ADA RAMP	20,000	04/22/2021
20120763	H/AC	3,500	05/02/2012
20061320	REROOF W/30YR SHN	5,292	06/12/2006
011431	XFOB	2,000	06/26/2001
8183	REPAIR/RRF	6,000	03/07/1994

SALES DATA

OFF RECORD Number	DATE	TYPE INST	Q / U	V / I	RSN CD	SALE PRICE
2420/0403	12/17/2020	WD	Q	I	01	1,150,000
GRANTOR: FRANKENFIELD JENNIFER						
GRANTEE: NASSAU TRUST LLC						
1980/1094	5/18/2015	WD	U	I	30	750,000
GRANTOR: WHITMIRE ANGEL ET AL						
GRANTEE: WHITMIRE JENNIFER N						

BUILDING NOTES

EXTRA FEATURES

LN	OB/XF CODE	DESCRIPTION	BLD	CAP	L	W	UNITS	UT	Adj R	ADJ UNIT PRICE	ORIG COND	YEAR ON	YEAR ACTUAL	Q	% COND	OB/XF MKT VALUE	NOTES

BUILDING DIMENSIONS

BAS=[YR=1993;ORIG=-15,0] W4 S3 W3 N9 W8 N8 W11 S8 W11 W4 S32 E5 E51 N20 W15 N6 $
FUS=[YR=1993;ORIG=5,-6] E38 S6 S3 E3 N3 E15 S26 W51 N20 W5 N12 $
FDG=[YR=1993;ORIG=70,32] E18 N30 W18 S30 $
FOP=[YR=1993;ORIG=-51,26] S10 E24 E12 E15 N10 W51 $
FOP=[YR=2008;ORIG=61,26] S10 W51 N10 E51 $
FOP=[YR=2008;ORIG=0,0] W15 S6 E15 N6 $
FSP=[YR=2008;ORIG=-41,-14] W11 S8 E11 N8 $
STR=[YR=2008;ORIG=-27,36] S5 E12 N5 W12 $
FST=[YR=1993;ORIG=-52,-14] W4 S8 E4 N8 $
FOP=[YR=1993;ORIG=-19,0] W3 S3 E3 N3 $

LAND DESCRIPTION

TOTAL OB/XF 0

LN	USE CODE	CLS	LAND USE DESCRIPTION	CAP	RD	LOC ZONE	FRONT	DEPTH	TOT LND UTS	UNIT TYPE	DT	DPTH FACT	% COND	TOT ADJ	UNIT PRICE	ADJ UNIT PRICE	LAND VALUE	OTHER ADJUSTMENTS AND NOTES	YEAR	DENSITY	DECL	FRZ	YR	CONSRV
1	000100	C	RES	0	0003	C-3	80.00	150.00	12,000.00	SF		1.00	1.00	1.00	150.00	150.00	1,800,000							

REVIEW DATE 01/31/2023 BY DJ Total Acres: 0.28 Total Land Value: 1,800,000 Market: 0 Agricultural: 0 Common: 1,800,000 PRINTED 07/09/2026 BY SYS