BLOCK 16 LOTS 1 & 34
CITY OF FDNA BEACH

MAGUIRE DIANA & THOMAS
19 SYLVAN RD
DARIEN, CT 06820

2026

00-00-31-1800-0016-0010

BUILDING CHARACTERISTICS

ELEMENT	CD	CONSTRUCTION
Exterior Wall	10	ABOVE AVG 50
Exterior Wall	11	BD/BTN AVG 50
Roof Structur	03	GABLE/HIP 100
Roof Cover	12	MODULAR MT 100
Interior Wall	05	DRYWALL 90
Interior Wall	03	PLASTER 10
Interior Floo	12	HARDWOOD 70
Interior Floo	14	CARPET 30
Air Condition	03	CENTRAL 100
Heating Type	04	AIR DUCTED 100
Bedrooms		4 100
Bathrooms		2.5 100
Frame	02	WOOD FRAME 100
Stories	2.	2. 100
Units		0 100
BUD8 Adjustme	02	DIST FB 100
Occupancy	00	NONE 100
Quality	03	Quality Level 03
DOR CODE	0100	SINGLE FAMILY
MAP NUM		MKT AREA 01
NEIGHBORHOOD/LOC	1005.00	

AREA TYPE	TOTAL GROSS AREA	PCT OF BASE	YEAR	TOT ADJ AREA	SUBAREA MARKET VALUE
BAS	912	100	1993	912	228,630
BAS	24	100	2000	24	6,016
BAS	153	100	2000	153	38,355
DCK	128	10	2000	13	3,260
FGR	327	55	2000	180	45,124
FOP	184	30	2000	55	13,788
FSP	129	40	2000	52	13,036
FST	112	55	2012	62	15,543
FUS	720	100	1993	720	180,497
FUS	696	100	2000	696	174,480
TOTALS	3,591			2,902	727,504

MARKET ADJUSTMENTS

TYPE	MDL	EFF. AREA	TOT ADJ PTS	EFF. BASE RATE	REPL. COST NEW	AYB	EYB	ECON	FNCT	PD	NORM	% COND
0500	01	2,902	104.1520	172.89	501,727	1900	2010	0	0	145	7.25	145.00

1 SFR CUST 0% - 2026 Heated Area: 2505 HX Base Yr

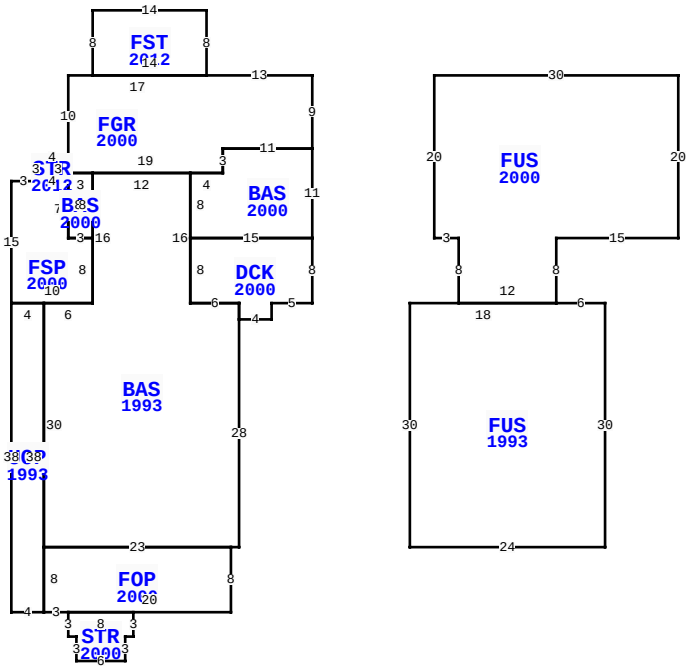

** This building has 13 Sub-Areas

301 BROOME ST, FERNANDINA BEACH

BLD DATE		LGL DATE	
XF DATE		LAND DATE	05/05/2026 MLU
INC DATE		AG DATE	

NASSAU COUNTY PROPERTY

PAGE 1 of 1 2

VALUATION SUMMARY

VALUATION BY	STANDARD
Tax Group: 2	Tax Dist:
BUILDING MARKET VALUE	727,504
TOTAL MARKET OB/XF VALUE	400
TOTAL LAND VALUE - MARKET	275,000
TOTAL MARKET VALUE	1,002,904
SOH/AGL Deduction	0
ASSESSED VALUE	1,002,904
TOTAL EXEMPTION VALUE	0
BASE TAXABLE VALUE	1,002,904
TOTAL JUST VALUE	1,002,904
NCON VALUE	0
INCOME VALUE	
PREVIOUS YEAR MKT VALUE	938,552

PERMIT NUM	DESCRIPTION	AMT	ISSUED
20111856	84 SF SHED	950	10/07/2011
20111408	RE-ROOF METAL	2,440	08/18/2011
20090927	H/AC	3,500	07/15/2009
20090019	REPLACE 21 WINDOW	14,000	01/08/2009
20070879	148LF METAL FENCE	10,500	05/21/2007
2002565	ADDITION & REMODE	10,000	03/27/2000

SALES DATA

OFF RECORD Number	DATE	TYPE INST	Q U	V I	RSN CD	SALE PRICE
2838/252	12/29/2025	WD	U	I	30	1,000,000
GRANTOR: MAGUIRE CAITLIN Q						
GRANTEE: MAGUIRE DIANA & THO						
2424/1346	1/11/2021	WD	Q	I	01	850,000
GRANTOR: SCHERER ELLEN P						
GRANTEE: MAGUIRE CAITLIN Q &						

BUILDING NOTES

BUILDING DIMENSIONS

FGR=[YR=2000] W13 FST=[YR=2012] N8W14S8 E14$ W17 S10
STR=[YR=2012] W4S3 FSP=[YR=2000] W3S15 UOP=[YR=1993] S38 E4
FOP=[YR=2000] E3 STR=[YR=2000] S3E1S3 E6 N3E1N3W8$E20 N8
BAS=[YR=1993] E1 N28 DCK=[YR=2000] E4N2E5N8 BAS=[YR=2000]
N11W11S3W4S8E15$ W15S8E6S2$ N2 W6N16W12 BAS=[YR=2000]
W3S8E3N8$ S16 W6S30E23$ W23 S8 $ N38 W4$ E10 N8W3
N7W4$E4N3$S2E19N3E11N9$ PTR= E15 FUS=[YR=2000] E30S20 W15 S8
FUS=[YR=1993] E6 S30 W24N30 E18 $ W12 N8 W3 N20 $ W15 $.

EXTRA FEATURES

LN	OB/XF CODE	DESCRIPTION	BLD	CAP	L	W	UNITS	UT	Adj R	ADJ UNIT PRICE	ORIG COND	YEAR ON	YEAR ACTUAL	Q	% COND	OB/XF MKT VALUE	NOTES
1	0504	FP-ELECTRI	0	0	0	0	1.00	UT	2,000.00	2,000.00	100	1940	1940	3	20	400	

LAND DESCRIPTION

TOTAL OB/XF 400

LN	USE CODE	CLS	LAND USE DESCRIPTION	CAP	RD	LOC ZONE	FRONT	DEPTH	TOT LND UTS	UNIT TYPE	DT	DPTH FACT	% COND	TOT ADJ	UNIT PRICE	ADJ UNIT PRICE	LAND VALUE	OTHER ADJUSTMENTS AND NOTES	YEAR	DENSITY	DECL	FRZ	YR	CONSRV
1	000100	C	RES	0	0003	R-2	50.00	100.00	50.00	FF		1.00	1.00	1.00	5,500.00	5,500.00	275,000							

REVIEW DATE 01/01/2023 BY CD Total Acres: 0.00 Total Land Value: 275,000 Market: 0 Agricultural: 0 Common: 275,000 PRINTED 07/09/2026 BY SYS