BLOCK 9 N1/2 LOTS 15 THRU 18
CITY OF FDNA BEACH

BONVOULOIR JEAN L & PENELOPE S
131 N 3RD ST
FERNANDINA BEACH, FL 32034

2026

00-00-31-1800-0009-0150

BUILDING CHARACTERISTICS

ELEMENT	CD	CONSTRUCTION
Exterior Wall	31	HARDIE BRD 100
Roof Structur	03	GABLE/HIP 100
Roof Cover	03	COMP SHNGL 100
Interior Wall	05	DRYWALL 100
Interior Floo	11	CLAY TILE 60
Interior Floo	14	CARPET 40
Air Condition	03	CENTRAL 100
Heating Type	04	AIR DUCTED 100
Bedrooms		4 100
Bathrooms		3 100
Frame	02	WOOD FRAME 100
Stories	2.	2. 100
Units		0 100
Quality	04	Quality Level 04
DOR CODE	0100	SINGLE FAMILY
MAP NUM		MKT AREA 01
NEIGHBORHOOD/LOC	1005.00	

AREA TYPE	TOTAL GROSS AREA	PCT OF BASE	YEAR	TOT ADJ AREA	SUBAREA MARKET VALUE
BAL	168	15	2022	25	5,376
BAS	1,474	100	2022	1,474	316,966
DCK	72	10	2022	7	1,505
FGR	378	55	2022	208	44,728
FOP	42	30	2022	13	2,796
FOP	102	30	2022	31	6,667
FOP	308	30	2022	92	19,783
FUS	280	100	2022	280	60,211
STP	5	10	2022	0	0
STR	16	10	2022	2	430
TOTALS	2,881			2,136	459,321

MARKET ADJUSTMENTS

TYPE	MDL	EFF. AREA	TOT ADJ PTS	EFF. BASE RATE	REPL. COST NEW	AYB	EYB	ECON	FNCT		NORM	% COND
0900	11	2,136	156.2669	217.21	463,961	2022	2022	0	0	0	1.00	99.00

1 SNGL FAM 100% - 2023 Heated Area: 1754 HX Base Yr 2023

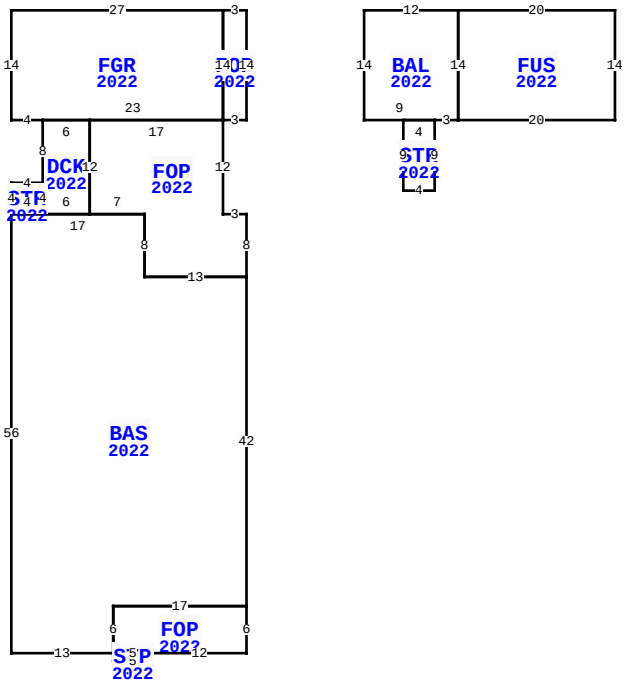

** This building has 11 Sub-Areas

131 N 3RD ST, FERNANDINA BEACH

BLD DATE		LGL DATE	
XF DATE		LAND DATE	05/05/2026 MLU
INC DATE		AG DATE	

NASSAU COUNTY PROPERTY

PAGE 1 of 1 2

VALUATION SUMMARY

VALUATION BY		STANDARD
Tax Group: 2	Tax Dist:	
BUILDING MARKET VALUE		459,321
TOTAL MARKET OB/XF VALUE		1,980
TOTAL LAND VALUE - MARKET		275,000
TOTAL MARKET VALUE		736,301
SOH/AGL Deduction		267,753
ASSESSED VALUE		468,548
TOTAL EXEMPTION VALUE	HX HB	51,411
BASE TAXABLE VALUE		417,137
TOTAL JUST VALUE		736,301
NCON VALUE		0
INCOME VALUE		
PREVIOUS YEAR MKT VALUE		682,709

PERMIT NUM	DESCRIPTION	AMT	ISSUED
20211597	CO ISSUED	0	09/19/2022
20211597	GARAGE	59,253	09/21/2021
20211276	NEW CONSTR	0	06/25/2021
20131564	NEW CONSTR	6,800	07/05/2013
20131582	ROOF	1,485	07/05/2013
20062769	REPAIR/RRF	6,600	12/19/2006

SALES DATA

OFF RECORD Number	DATE	TYPE INST	Q / U	V / I	RSN CD	SALE PRICE
2330/0280	1/03/2020	WD	Q	V	02	122,000
GRANTOR: SINTES THOMAS J						
GRANTEE: BONVOULOIR JEAN L &						
2330/0276	12/20/2019	QC	U	V	11	100
GRANTOR: KELLEY PAMELA K F/K/A						
GRANTEE: SINTES THOMAS J						

BUILDING NOTES

BUILDING DIMENSIONS

FOP=[YR=2022] W3 FGR=[YR=2022] W27 S14 E4 DCK=[YR=2022] S8 STR=[YR=2022] W4S4 BAS=[YR=2022] S56 E13 STP=[YR=2022] S1E5N1 FOP=[YR=2022] E12 N6 W17 S6 E5$ W5$ N6 E17 N42 FOP=[YR=2022] N8W3N12W17 S12 E7 S8 E13$ W13 N8 W17$ E4 N4$ S4 E6 N12 W6$ E23 N14$ S14 E3 N14$ PTR=E15 BAL=[YR=2022] E12 FUS=[YR=2022] E20 S14 W20 N14$ S14 W3 STR=[YR=2022] S9W4N9E4$ W9 N14$ W15$.

EXTRA FEATURES

LN	OB/XF CODE	DESCRIPTION	BLD	CAP	L	W	UNITS	UT	Adj R	ADJ UNIT PRICE	ORIG COND	YEAR ON	YEAR ACTUAL	Q	% COND	OB/XF MKT VALUE	NOTES
3	0504	FP-ELECTRI	0	100	0	0	1.00	UT	2,000.00	2,000.00	100	2022	2022	3	99	1,980	

LAND DESCRIPTION

TOTAL OB/XF 1,980

LN	USE CODE	CLS	LAND USE DESCRIPTION	CAP	RD	LOC ZONE	FRONT	DEPTH	TOT LND UTS	UNIT TYPE	DT	DPTH FACT	% COND	TOT ADJ	UNIT PRICE	ADJ UNIT PRICE	LAND VALUE	OTHER ADJUSTMENTS AND NOTES	YEAR	DENSITY	DECL	FRZ	YR	CONSRV
1	000100	C	RES	100	0003	R-2	50.00	100.00	50.00	FF		1.00	1.00	1.00	5,500.00	5,500.00	275,000							

REVIEW DATE 01/31/2023 BY DJ Total Acres: 0.00 Total Land Value: 275,000 Market: 0 Agricultural: 0 Common: 275,000 PRINTED 07/09/2026 BY SYS