BLOCK 8 LOT S1/2 OF 10 TO 14
PT OR 1707/429
CITY OF FDNA BEACH

HAMBROCK LUDGER/
1719 LISA AVENUE
FERNANDINA BEACH, FL 32034

2026

00-00-31-1800-0008-0102

NASSAU COUNTY PROPERTY

BUILDING CHARACTERISTICS

ELEMENT	CD	CONSTRUCTION
Exterior Wall	17	CB STUCCO 100
Roof Structur	04	WOOD TRUSS 100
Roof Cover	12	MODULAR MT 100
Interior Wall	05	DRYWALL 100
Interior Floo	04	C ABOVE GD 60
Interior Floo	11	CLAY TILE 40
Ceiling	02	F.NOT SUS 100
Air Condition	02	WINDOW 100
Heating Type	01	NONE 100
Plumbing		9 100
Frame	03	MASONRY 100
Story Height		11 100
RMS		3 100
Stories	2.	2. 100
Class	00	. 100
Units		0 100
BUD8 Adjustme	02	DIST FB 100
Occupancy	00	NONE 100
Quality	05	Quality Level 05

DOR CODE	4800	WAREHOUSE-STORAGE	
MAP NUM		MKT AREA	01
NEIGHBORHOOD/LOC	1004.00		

AREA TYPE	TOTAL GROSS AREA	PCT OF BASE	YEAR	TOT ADJ AREA	SUBAREA MARKET VALUE
APT	864	250	1993	2,160	114,461
BAS	3,504	100	1993	3,504	185,682
BAS	480	100	2014	480	25,436
CAN	210	30	1993	63	3,339
CLP	162	60	2014	97	5,141
ULP	977	30	1993	293	15,526
TOTALS	6,197			6,597	349,585

MARKET ADJUSTMENTS

TYPE	MDL	EFF. AREA	TOT ADJ PTS	EFF. BASE RATE	REPL. COST NEW	AYB	EYB	ECON	FNCT		NORM	% COND
4803	06	6,597	144.8784	68.82	454,006	1980	2005	0	0	0	23.00	77.00

1 STOR WAREH 0% - 0 Heated Area: 4848 HX Base Yr

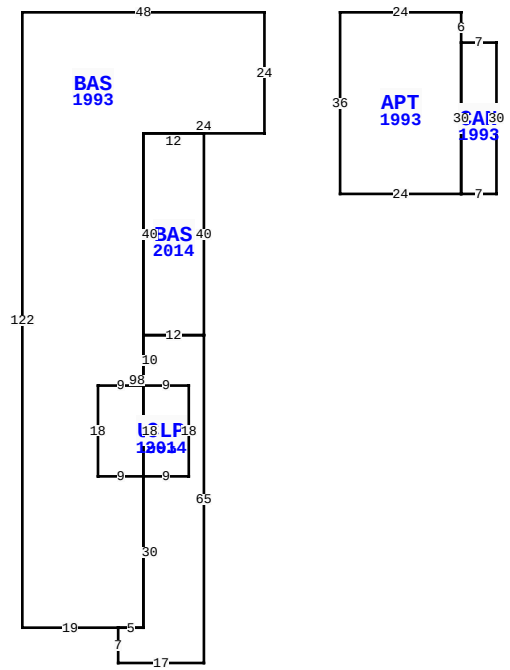

228 N 2ND ST, FERNANDINA BEACH

BLD DATE	06/10/2021	KK	LGL DATE	
XF DATE	06/10/2021	KK	LAND DATE	05/04/2026 DC
INC DATE	05/01/2024	REA	AG DATE	

NASSAU COUNTY PROPERTY — VALUATION SUMMARY

VALUATION BY	DIRECT_CAP
Tax Group: 2	Tax Dist:
BUILDING MARKET VALUE	435,013
TOTAL MARKET OB/XF VALUE	0
TOTAL LAND VALUE - MARKET	0
TOTAL MARKET VALUE	435,013
SOH/AGL Deduction	263,977
ASSESSED VALUE	171,036
TOTAL EXEMPTION VALUE	0
BASE TAXABLE VALUE	171,036
TOTAL JUST VALUE	435,013
NCON VALUE	0
INCOME VALUE	435013
PREVIOUS YEAR MKT VALUE	424,429

PERMIT NUM	DESCRIPTION	AMT	ISSUED
20102085	REMODEL	3,600	12/07/2010
20102086	H/AC	1,300	12/07/2010
20100464	ADDITION	4,500	03/19/2010
20100466	OTHER	1,000	03/19/2010
20100465	ELEC OTHER	300	03/18/2010
20100361	XFOB	450	02/26/2010

SALES DATA

OFF RECORD Number	DATE	TYPE INST	Q U	V I	RSN CD	SALE PRICE
1707/0429	10/28/2010	WD	U	I	11	200,000
GRANTOR: SYNOVUS BANK						
GRANTEE: HAMBROCK LUDGER						
1702/0123	9/29/2010	WD	U	I	12	179,700
GRANTOR: ROWE JASON N & SUSAN						
GRANTEE: SYNOVUS BANK						

BUILDING NOTES

BUILDING DIMENSIONS

BAS=[YR=1993] W48 S122 E19 ULP=[YR=1993] S7 E17
N65BAS=[YR=2014] N40 W12 S40 E12$ W12 S10CLP=[YR=2014]
S18E9N18W9 $W9S18E9S30W5$ E5 N98 E24 N24 $ PTR= E15
APT=[YR=1993] E24 S6 CAN=[YR=1993] E7 S30 W7 N30$ S30 W24
N36$ W15$.

EXTRA FEATURES

LN	OB/XF CODE	DESCRIPTION	BLD	CAP	L	W	UNITS	UT	Adj R	ADJ UNIT PRICE	ORIG COND	YEAR ON	YEAR ACTUAL	Q	% COND	OB/XF MKT VALUE	NOTES
1	0811	CONCRETE B	0	0	0	0	658.00	SF	5.20	5.20	100	1980	1980	3	29	992	
2	0812	CONCRETE C	0	0	0	0	1,399.00	SF	4.00	4.00	100	1995	1995	3	66	3,693	
3	0430	CL FNC 6B	0	0	0	0	61.00	LF	9.70	9.70	100	1995	1995	3	30	178	
4	6001	ROLLUP DR	0	0	0	0	2.00	UT	400.00	400.00	100	1995	1995	3	20	160	
5	1242	WD DECK A	0	0	0	0	84.00	SF	10.00	10.00	100	1995	1995	3	20	168	
6	0819	CONC 12"	0	0	14	8	112.00	SF	9.50	9.50	100	1995	1995	3	66	702	
7	0681	POLE SHED	0	0	17	9	153.00	SF	15.00	15.00	100	1999	1999	3	25	574	

LAND DESCRIPTION

TOTAL OB/XF 6,467

LN	USE CODE	CLS	LAND USE DESCRIPTION	CAP	RD	LOC ZONE	FRONT	DEPTH	TOT LND UTS	UNIT TYPE	DT	DPTH FACT	% COND	TOT ADJ	UNIT PRICE	ADJ UNIT PRICE	LAND VALUE	OTHER ADJUSTMENTS AND NOTES	YEAR	DENSITY	DECL	FRZ	YR	CONSRV
1	004800	C	WAREHOUSE	0	0003	I-1	50.00	125.00	6,250.00	SF		1.00	1.00	1.00	10.00	10.00	62,500							

REVIEW DATE 01/01/2023 BY CD Total Acres: 0.14 Total Land Value: 0 Market: 0 Agricultural: 0 Common: 0 PRINTED 07/09/2026 BY SYS