BLOCK 8 LOT N1/2 OF 10 TO 14
CITY OF FDNA BEACH

WICKED BAO LLC/
232 N 2ND STREET
FERNANDINA BEACH, FL 32034

2026

00-00-31-1800-0008-0101

BUILDING CHARACTERISTICS

ELEMENT	CD	CONSTRUCTION
Exterior Wall	10	ABOVE AVG 80
Exterior Wall	19	COMMON BRK 20
Roof Structur	04	WOOD TRUSS 100
Roof Cover	03	COMP SHNGL 90
Roof Cover	02	ROLL COMP 10
Interior Wall	05	DRYWALL 70
Interior Wall	01	MINIMUM 30
Interior Floo	12	HARDWOOD 80
Interior Floo	11	CLAY TILE 20
Ceiling	02	F.NOT SUS 100
Air Condition	03	CENTRAL 100
Heating Type	04	AIR DUCTED 100
Fixtures		19 100
Frame	02	WOOD FRAME 100
Story Height		10 100
RMS		6 100
Stories	2.	2. 100
Units		0 100
Quality	02	Quality Level 03
Qualityadjustme	02	QUALITY LEVEL

DOR CODE	2100	RESTAURANTS/CAFE	
MAP NUM		MKT AREA	01
NEIGHBORHOOD/LOC	1004.00		

AREA TYPE	TOTAL GROSS AREA	PCT OF BASE	YEAR	TOT ADJ AREA	SUBAREA MARKET VALUE
APT	1,498	100	2014	1,498	238,349
BAS	1,698	100	1993	1,698	270,171
BAS	140	100	1994	140	22,276
BAS	80	100	2006	80	12,729
BAS	80	100	2006	80	12,729
BAS	400	100	2006	400	63,644
CAN	12	30	1993	4	637
CAN	16	30	2006	5	796
CAN	88	30	2006	26	4,137
CAN	380	30	2006	114	18,139
TOTALS	4,848			4,090	650,764

MARKET ADJUSTMENTS

TYPE	MDL	EFF. AREA	TOT ADJ PTS	EFF. BASE RATE	REPL. COST NEW	AYB	EYB	ECON	FNCT		NORM	% COND
2101	04	4,090	107.2436	191.70	784,053	1902	2005	0	0	0	17.00	83.00

1 RSTARANT 1 0% - 0 Heated Area: 3896 HX Base Yr

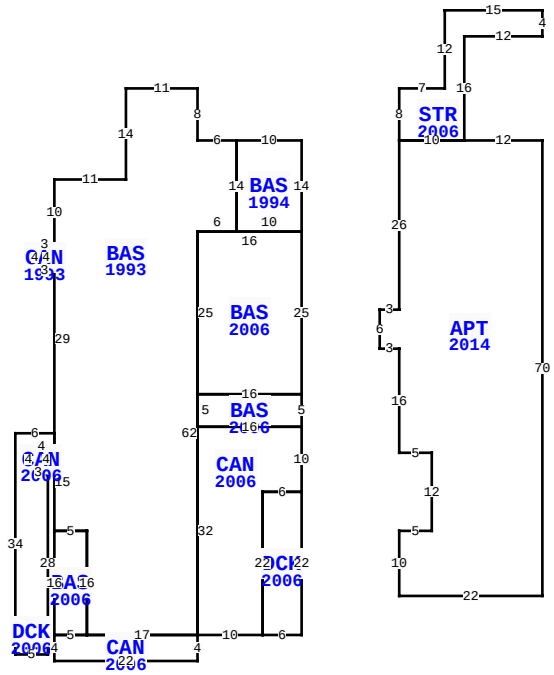

** This building has 13 Sub-Areas

232 N 2ND ST, FERNANDINA BEACH

BLD DATE	06/10/2021	KK	LGL DATE	
XF DATE	06/10/2021	KK	LAND DATE	05/04/2026 DC
INC DATE			AG DATE	

NASSAU COUNTY PROPERTY

PAGE 1 of 1 2

VALUATION SUMMARY

VALUATION BY	STANDARD
Tax Group: 2	Tax Dist:
BUILDING MARKET VALUE	650,764
TOTAL MARKET OB/XF VALUE	19,441
TOTAL LAND VALUE - MARKET	62,500
TOTAL MARKET VALUE	732,705
SOH/AGL Deduction	45,839
ASSESSED VALUE	686,866
TOTAL EXEMPTION VALUE	0
BASE TAXABLE VALUE	686,866
TOTAL JUST VALUE	732,705
NCON VALUE	0
INCOME VALUE	
PREVIOUS YEAR MKT VALUE	681,521

PERMIT NUM	DESCRIPTION	AMT	ISSUED
C0110258	REMODEL	2,400	02/24/2011
20110182	H/AC	2,100	02/08/2011
20081115	XFOB	375	07/02/2008
20061958	H/AC	1,800	08/22/2006
20061717	GAS	150	07/19/2006
20061634	TEMP POLE	4,500	07/11/2006

SALES DATA

OFF RECORD Number	DATE	TYPE INST	Q / U	V / I	RSN CD	SALE PRICE
2319/0804	11/15/2019	WD	U	I	37	700,000
GRANTOR: HAMBROCK LUDGER						
GRANTEE: WICKED BAO LLC						
1707/0429	10/28/2010	WD	U	I	11	200,000
GRANTOR: SYNOVUS BANK						
GRANTEE: HAMBROCK LUDGER						

BUILDING NOTES

BUILDING DIMENSIONS

BAS=[YR=1994] W10BAS=[YR=1993] W6N8W11S14 W11S10CAN=[YR=1993] W3S4E3N4$S29 DCK=[YR=2006] W6S34E5N28CAN=[YR=2006] E1N4 W4S4E3$W3N4E4N2$S15BAS=[YR=2006] S16 E5N16W5$E5S16CAN=[YR=2006] W5S4E22N4 W17$E17CAN=[YR=2006] E10DCK=[YR=2006] E6 N22W6S22$N22E6N10BAS=[YR=2006] N5 BAS=[YR=2006] N25W16S25E16$W16S5E16$ W16S32$N62E6N14$S14E10N14$ PTR=E15 APT=[YR=2014] S26W3S6E3S16E5 S12W5S10E22N70W12STR=[YR=2006] N16 E12N4W15S12W7S8E10$W10$W15$.

EXTRA FEATURES

LN	OB/XF CODE	DESCRIPTION	BLD	CAP	L	W	UNITS	UT	Adj R	ADJ UNIT PRICE	ORIG COND	YEAR ON	YEAR ACTUAL	Q	% COND	OB/XF MKT VALUE	NOTES
1	0418	EXHST FAN	0	0	0	0	1.00	UT	400.00	400.00	100	2006	2006	3	22	88	
2	0964	HALON SYST	0	0	14	4	56.00	SF	50.00	50.00	100	2006	2006	3	84	2,352	
3	0825	BRICK	0	0	0	0	368.00	SF	12.50	12.50	100	2000	2000	3	93	4,278	
4	0143	BAR TOP G	0	0	0	0	34.00	LF	315.00	315.00	100	2006	2006	3	22	2,356	
5	0100	BAR-B-Q	0	0	0	0	1.00	UT	1,000.00	1,000.00	100	2006	2006	3	22	220	
6	0810	CONCRETE A	0	0	0	0	231.00	SF	6.50	6.50	100	2006	2006	3	84	1,261	
7	0383	FREEZER	0	0	6	2	12.00	SF	105.00	105.00	100	2006	2006	3	54	680	
8	0381	COOLER	0	0	14	10	140.00	SF	82.50	82.50	100	2006	2006	3	54	6,237	
9	1123	CB 8"	0	0	0	0	368.00	SF	6.15	6.15	100	2008	2008	3	87	1,969	

LAND DESCRIPTION

TOTAL OB/XF 19,441

LN	USE CODE	CLS	LAND USE DESCRIPTION	CAP	RD	LOC ZONE	FRONT	DEPTH	TOT LND UTS	UNIT TYPE	DT	DPTH FACT	% COND	TOT ADJ	UNIT PRICE	ADJ UNIT PRICE	LAND VALUE	OTHER ADJUSTMENTS AND NOTES	YEAR	DENSITY	DECL	FRZ	YR	CONSRV
1	002100	C	RESTAURANT	0	0003	I-1	50.00	125.00	6,250.00	SF		1.00	1.00	1.00	10.00	10.00	62,500							

REVIEW DATE 01/01/2023 BY CD Total Acres: 0.14 Total Land Value: 62,500 Market: 0 Agricultural: 0 Common: 62,500 PRINTED 07/09/2026 BY SYS