BLOCK 8 LOT 2 & S1/2 OF LOT 3
CITY OF FDNA BEACH
ESMT IN OR 2619-934

BRAXTON FAMILY TRUST/BRAXTON THOMAS M JR TRUSTEE
212 N 2ND ST
FERNANDINA BEACH, FL 32034

2026

00-00-31-1800-0008-0020

BUILDING CHARACTERISTICS

ELEMENT	CD	CONSTRUCTION
Exterior Wall	10	ABOVE AVG 50
Exterior Wall	16	WD FR STUC 50
Roof Structur	03	GABLE/HIP 100
Roof Cover	12	MODULAR MT 100
Interior Wall	05	DRYWALL 100
Interior Floo	11	CLAY TILE 70
Interior Floo	14	CARPET 30
Air Condition	03	CENTRAL 100
Heating Type	04	AIR DUCTED 100
Bedrooms		4 100
Bathrooms		4 100
Frame	02	WOOD FRAME 100
Quality	03	Quality Level 03
DOR CODE	0100	SINGLE FAMILY
MAP NUM		MKT AREA 01
NEIGHBORHOOD/LOC	1004.00	

AREA TYPE	TOTAL GROSS AREA	PCT OF BASE	YEAR	TOT ADJ AREA	SUBAREA MARKET VALUE
BAS	1,176	100	2024	1,176	358,989
DCK	80	10	2024	8	2,443
FGR	528	55	2024	290	88,526
FOP	240	30	2024	72	21,979
FOP	240	30	2024	72	21,979
FOP	264	30	2024	79	24,116
FST	60	55	2024	33	10,074
FST	324	55	2024	178	54,336
FUS	432	100	2024	432	131,873
FUS	1,176	100	2024	1,176	358,989
TOTALS	4,520			3,516	1,073,305

MARKET ADJUSTMENTS

TYPE	MDL	EFF. AREA	TOT ADJ PTS	EFF. BASE RATE	REPL. COST NEW	AYB	EYB	ECON	FNCT		NORM	% COND
0500	12	3,516	185.2830	307.57	1,081,416	2023	2023	0	0	0	0.75	99.25

1 SFR CUST 100% - 2024 Heated Area: 2784 HX Base Yr 2024

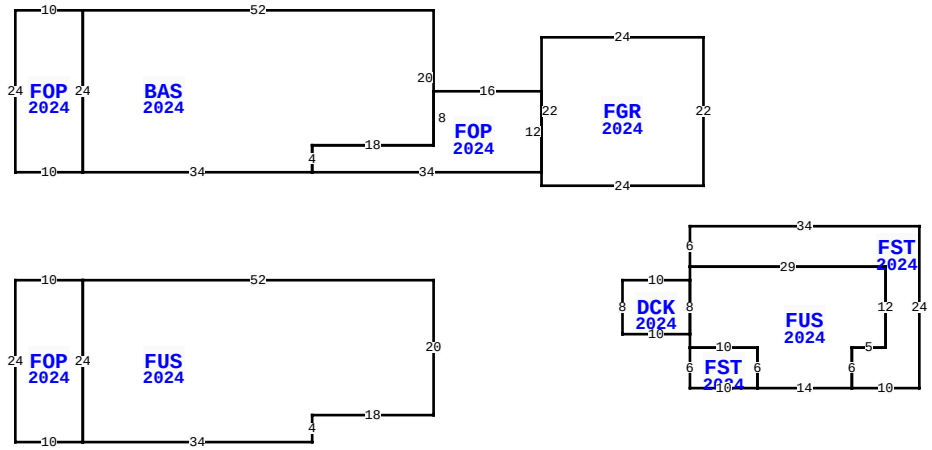

212 N 2ND ST, FERNANDINA BEACH

BLD DATE		LGL DATE	
XF DATE		LAND DATE	05/04/2026 DC
INC DATE		AG DATE	

NASSAU COUNTY PROPERTY

PAGE 1 of 1 2

VALUATION SUMMARY

VALUATION BY		STANDARD
Tax Group: 2	Tax Dist:	
BUILDING MARKET VALUE		1,073,305
TOTAL MARKET OB/XF VALUE		0
TOTAL LAND VALUE - MARKET		210,915
TOTAL MARKET VALUE		1,284,220
SOH/AGL Deduction		46,703
ASSESSED VALUE		1,237,517
TOTAL EXEMPTION VALUE	HX HB	51,411
BASE TAXABLE VALUE		1,186,106
TOTAL JUST VALUE		1,284,220
NCON VALUE		0
INCOME VALUE		
PREVIOUS YEAR MKT VALUE		1,220,591

PERMIT NUM	DESCRIPTION	AMT	ISSUED
2021-1339	CO		10/16/2023
20211339	4124 TSF	385,040	07/15/2021
4988	DEMOLITION	0	08/23/1988

SALES DATA

OFF RECORD Number	DATE	TYPE INST	Q / U	V / I	RSN CD	SALE PRICE
2753/1307	11/26/2024	WD	U	I	11	100
GRANTOR: BRAXTON THOMAS M JR &						
GRANTEE: BRAXTON FAMILY TRUS						
2671/1387	10/03/2023	SW	Q	I	01	1,394,800
GRANTOR: ARTISAN RE PARTNERS L						
GRANTEE: BRAXTON THOMAS M JR						

BUILDING NOTES

BUILDING DIMENSIONS

FOP=[YR=2024;ORIG=20,10] E10 S24 W10 N24 $
BAS=[YR=2024;ORIG=30,10] E52 S20 W18 S4 W34 N24 $
FOP=[YR=2024;ORIG=64,30] S4 E34 N12 W16 S8 W18 $
FGR=[YR=2024;ORIG=98,36] E24 N22 W24 S22 $
FOP=[YR=2024;ORIG=20,50] E10 S24 W10 N24 $
FUS=[YR=2024;ORIG=30,50] E52 S20 W18 S4 W34 N24 $
DCK=[YR=2024;ORIG=110,50] E10 S8 W10 N8 $
FUS=[YR=2024;ORIG=120,48] S2 S8 S2 E10 S6 E14 N6 E5 N12 W29 $
FST=[YR=2024;ORIG=130,60] W10 S6 E10 N6 $
FST=[YR=2024;ORIG=144,60] S6 E10 N24 W34 S6 E29 S12 W5 $
.

EXTRA FEATURES

L N	OB/XF CODE	DESCRIPTION	BLD	CAP	L	W	UNITS	UT	Adj R	ADJ UNIT PRICE	ORIG COND	YEAR ON	YEAR ACTUAL	Q	% COND	OB/XF MKT VALUE	NOTES

LAND DESCRIPTION

TOTAL OB/XF 0

L N	USE CODE	CLS	LAND USE DESCRIPTION	CAP	R D	LOC ZONE	FRONT	DEPTH	TOT LND UTS	UNIT TYPE	D T	DPTH FACT	% COND	TOT ADJ	UNIT PRICE	ADJ UNIT PRICE	LAND VALUE	OTHER ADJUSTMENTS AND NOTES	YEAR	DENSITY	DECL	FRZ	YR	CONSRV
1	001000	C	COMMERCIAL	100		C-3	37.00	125.00	4,687.00	SF		1.00	1.00	1.00	45.00	45.00	210,915							

REVIEW DATE 12/20/2023 BY HS Total Acres: 0.11 Total Land Value: 210,915 Market: 0 Agricultural: 0 Common: 210,915 PRINTED 07/09/2026 BY SYS