BLOCK 6 LOT 19 20 21 22
IN OR 1305/572
CITY OF FDNA BEACH

MAIER CHARLES S & KATHLEEN A L/E/
421 N 3RD ST
FERNANDINA BEACH, FL 32034

**2026**

**00-00-31-1800-0006-0190**

## NASSAU COUNTY PROPERTY



## BUILDING CHARACTERISTICS

| ELEMENT | CD | CONSTRUCTION |
|---|---|---|
| Exterior Wall | 12 | CEDAR 100 |
| Roof Structur | 08 | IRREGULAR 100 |
| Roof Cover | 03 | COMP SHNGL 100 |
| Interior Wall | 05 | DRYWALL 100 |
| Interior Floo | 12 | HARDWOOD 100 |
| Air Condition | 03 | CENTRAL 100 |
| Heating Type | 04 | AIR DUCTED 100 |
| Bedrooms | | 4 100 |
| Bathrooms | | 3 100 |
| Frame | 02 | WOOD FRAME 100 |
| Stories | 2. | 2. 100 |
| Units | | 0 100 |
| BUD8 Adjustme | 02 | DIST FB 100 |
| Occupancy | 00 | NONE 100 |
| Quality | 04 | Quality Level 04 |

DOR CODE 0100 SINGLE FAMILY
MAP NUM | MKT AREA 01
NEIGHBORHOOD/LOC 1005.00

| AREA TYPE | TOTAL GROSS AREA | PCT OF BASE | YEAR | TOT ADJ AREA | SUBAREA MARKET VALUE |
|---|---|---|---|---|---|
| BAL | 64 | 15 | 2010 | 10 | 922 |
| BAL | 663 | 15 | 2010 | 99 | 9,129 |
| BAS | 1,622 | 100 | 1993 | 1,622 | 149,571 |
| DCK | 782 | 10 | 1993 | 78 | 7,193 |
| FOP | 70 | 30 | 1993 | 21 | 1,936 |
| FOP | 105 | 30 | 1993 | 32 | 2,951 |
| FOP | 204 | 30 | 1993 | 61 | 5,625 |
| FUS | 1,604 | 100 | 1993 | 1,604 | 147,911 |
| PTO | 759 | 5 | 2010 | 38 | 3,504 |
| STR | 56 | 10 | 2010 | 6 | 553 |
| TOTALS | 6,561 | | | 3,871 | 356,960 |

## MARKET ADJUSTMENTS

| TYPE | MDL | EFF. AREA | TOT ADJ PTS | EFF. BASE RATE | REPL. COST NEW | AYB | EYB | ECON | FNCT | | NORM | % COND |
|---|---|---|---|---|---|---|---|---|---|---|---|---|
| 0900 | 01 | 3,871 | 110.5650 | 153.69 | 594,934 | 1900 | 1995 | 25 | 0 | 0 | 15.00 | 60.00 |

1 SNGL FAM 100% - 2007 Heated Area: 3226 HX Base Yr 2007

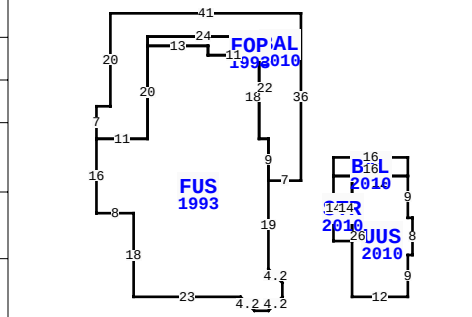


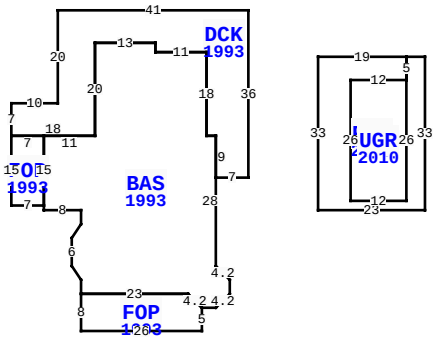


** This building has 12 Sub-Areas

421 N 3RD ST, FERNANDINA BEACH

| | | | |
|---|---|---|---|
| BLD DATE | | LGL DATE | |
| XF DATE | | LAND DATE | 05/05/2026 MLU |
| INC DATE | | AG DATE | |

## VALUATION SUMMARY

| | | |
|---|---|---|
| VALUATION BY | | STANDARD |
| Tax Group: 2 | Tax Dist: | |
| BUILDING MARKET VALUE | | 356,960 |
| TOTAL MARKET OB/XF VALUE | | 1,227 |
| TOTAL LAND VALUE - MARKET | | 500,000 |
| TOTAL MARKET VALUE | | 858,187 |
| SOH/AGL Deduction | | 584,021 |
| ASSESSED VALUE | | 274,166 |
| TOTAL EXEMPTION VALUE | HX HB | 51,411 |
| BASE TAXABLE VALUE | | 222,755 |
| TOTAL JUST VALUE | | 858,187 |
| NCON VALUE | | 0 |
| INCOME VALUE | | |
| PREVIOUS YEAR MKT VALUE | | 828,785 |

| PERMIT NUM | DESCRIPTION | AMT | ISSUED |
|---|---|---|---|
| 20131491 | MTLFENCE | 0 | 06/27/2013 |
| 20122522 | H/AC | 3,000 | 12/17/2012 |
| 20091633 | GARAGE ROOF | 1,785 | 12/01/2009 |
| 20091586 | GARAGE WIRING | 3,750 | 11/18/2009 |
| 20091449 | GARAGE | 61,745 | 10/22/2009 |
| 20060297 | REWIRE WHOLE HOUS | 900 | 02/09/2006 |

## SALES DATA

| OFF RECORD Number | DATE | TYPE INST | Q / U | V / I | RSN CD | SALE PRICE |
|---|---|---|---|---|---|---|
| 2838/1905 | 12/23/2025 | LE | U | I | 11 | 100 |
| GRANTOR: MAIER CHARLES S & KAT | | | | | | |
| GRANTEE: MAIER KRISTIN | | | | | | |
| 1305/0572 | 3/29/2005 | WD | Q | I | | 450,000 |
| GRANTOR: HARBOR VIEW HOUSE INC | | | | | | |
| GRANTEE: MAIER CHARLES S & K | | | | | | |

## EXTRA FEATURES

| LN | OB/XF CODE | DESCRIPTION | BLD | CAP | L | W | UNITS | UT | Adj R | ADJ UNIT PRICE | ORIG COND | YEAR ON | YEAR ACTUAL | Q | % COND | OB/XF MKT VALUE | NOTES |
|---|---|---|---|---|---|---|---|---|---|---|---|---|---|---|---|---|---|
| 1 | 0504 | FP-ELECTRI | 0 | 100 | 0 | 0 | 2.00 | UT | 2,000.00 | 2,000.00 | 100 | 1910 | 1910 | 3 | 20 | 800 | |
| 5 | 0940 | SHEDS/PORT | 0 | 100 | 10 | 6 | 60.00 | SF | 30.00 | 30.00 | 100 | 1993 | 1993 | 3 | 20 | 360 | |
| 6 | 1242 | WD DECK A | 0 | 100 | 4 | 8 | 32.00 | SF | 10.00 | 10.00 | 100 | 2005 | 2005 | 3 | 21 | 67 | |

## BUILDING NOTES

## BUILDING DIMENSIONS

DCK=[YR=1993] W41 S20 W10 S7 FOP=[YR=1993] S15 E7
BAS=[YR=1993] S1 E8 S3 L2 D3 S6 R2 D3 S3 FOP=[YR=1993] S8
E26N5 U3 L3 W23$ E23 D3 R3 E3 R3 U3 N3 U3 L3 N28W2 N18 W11 N2
W13 S20 W11 S15$N15 W7 $ E18 N20 E13 S2 E11 S18 E2 S9 E7 N36$
PTR=N10 FUS=[YR=1993] N3 U3 L3 N19 BAL=[YR=2010] E7N36
W41S20W3S7 E11N20 FOP=[YR=1993] E13S2E11N4W24S2 $
N2E24S22E2S9$ N9W2N18 W11N2 W13 S20W11 S16E8S18 E23 D3 R3 E3
R3 U3 $S10$ PTR=E15S10 PTO=[YR=2010] E19S5UGR=[YR=2010]
S26W12N26 E12$ N5E4 S33W23N33$N10W15$ PTR=N10E15
UUS=[YR=2010] E12N9E1N8W1 N9 BAL=[YR=2010] N4 W16 S4
STR=[YR=2010] S14E4N14W4$ E16$ W12S26$ W15 S10$.

## LAND DESCRIPTION

TOTAL OB/XF 1,227

| LN | USE CODE | CLS | LAND USE DESCRIPTION | CAP | RD | LOC ZONE | FRONT | DEPTH | TOT LND UTS | UNIT TYPE | DT | DPTH FACT | % COND | TOT ADJ | UNIT PRICE | ADJ UNIT PRICE | LAND VALUE | OTHER ADJUSTMENTS AND NOTES | YEAR | DENSITY | DECL | FRZ | YR | CONSRV |
|---|---|---|---|---|---|---|---|---|---|---|---|---|---|---|---|---|---|---|---|---|---|---|---|---|
| 1 | 000100 | C | RES | 100 | 0006 | MU-1 | 100.00 | 100.00 | 100.00 | FF | | 1.00 | 1.00 | 1.00 | 5,000.00 | 5,000.00 | 500,000 | | | | | | | |

REVIEW DATE 01/01/2023 BY CD Total Acres: 0.00 Total Land Value: 500,000 Market: 0 Agricultural: 0 Common: 500,000 PRINTED 07/09/2026 BY SYS