LOT 61
SELVA VERDA SUB #3 PB 4/102

STAKELY MICHAEL ANDREW & SANDRA LEE
1707 WEST GLENHURST DRIVE
LANCASTER, OH 43130

2026

00-00-31-1687-0061-0000

NASSAU COUNTY PROPERTY

BUILDING CHARACTERISTICS

ELEMENT	CD	CONSTRUCTION
Exterior Wall	12	CEDAR 100
Roof Structur	03	GABLE/HIP 100
Roof Cover	03	COMP SHNGL 100
Interior Wall	05	DRYWALL 100
Interior Floo	12	HARDWOOD 80
Interior Floo	11	CLAY TILE 20
Air Condition	03	CENTRAL 100
Heating Type	04	AIR DUCTED 100
Bedrooms		4 100
Bathrooms		2.5 100
Frame	02	WOOD FRAME 100
Stories	2.	2. 100
Units		0 100
BUD8 Adjustme	02	DIST FB 100
Occupancy	00	NONE 100
Quality	05	Quality Level 05
DOR CODE	0100	SINGLE FAMILY
MAP NUM		MKT AREA 01
NEIGHBORHOOD/LOC	1073.00	

AREA TYPE	TOTAL GROSS AREA	PCT OF BASE	YEAR	TOT ADJ AREA	SUBAREA MARKET VALUE
BAS	1,715	100	1993	1,715	219,069
BAS	396	100	2007	396	50,584
DCK	220	10	2007	22	2,810
FGR	484	55	1993	266	33,978
FOP	76	30	1993	23	2,938
FOP	20	30	2007	6	766
FUS	1,480	100	1993	1,480	189,051
UOP	140	20	1993	28	3,577
UOP	140	20	1993	28	3,577
UOP	54	20	2007	11	1,405
TOTALS	4,725			3,975	507,755

MARKET ADJUSTMENTS

TYPE	MDL	EFF. AREA	TOT ADJ PTS	EFF. BASE RATE	REPL. COST NEW	AYB	EYB	ECON	FNCT		NORM	% COND
0900	01	3,975	113.4540	157.70	626,858	1987	1987	0	0	0	19.00	81.00

1 SNGL FAM 0% - 2025 Heated Area: 3591 HX Base Yr

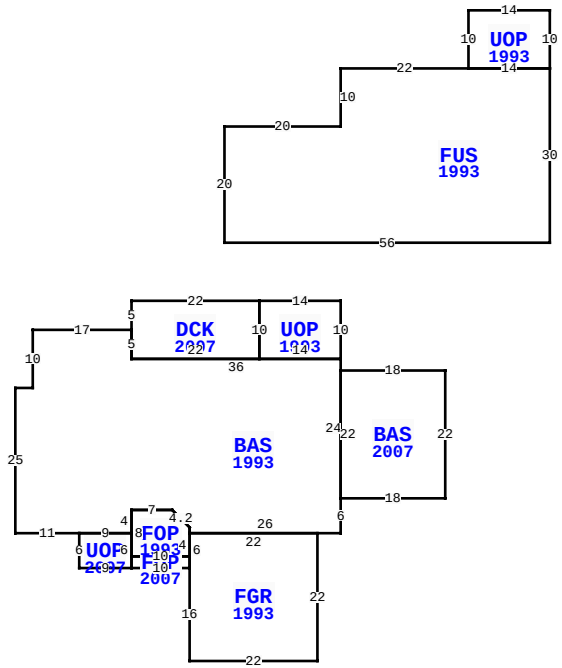

3612 VIA DEL MAR, FERNANDINA BEACH

BLD DATE		LGL DATE	
XF DATE		LAND DATE	04/28/2026 MLU
INC DATE		AG DATE	

VALUATION SUMMARY

VALUATION BY	STANDARD
Tax Group: 2	Tax Dist:
BUILDING MARKET VALUE	507,755
TOTAL MARKET OB/XF VALUE	3,400
TOTAL LAND VALUE - MARKET	400,000
TOTAL MARKET VALUE	911,155
SOH/AGL Deduction	0
ASSESSED VALUE	911,155
TOTAL EXEMPTION VALUE	0
BASE TAXABLE VALUE	911,155
TOTAL JUST VALUE	911,155
NCON VALUE	0
INCOME VALUE	
PREVIOUS YEAR MKT VALUE	850,829

PERMIT NUM	DESCRIPTION	AMT	ISSUED
2025-1537	V	10,000	10/29/2025
20130958	H/AC	3,000	04/30/2013
20122330	ROOF	9,500	11/16/2012
20090332	OTHER	2,000	03/16/2009
20090323	REMODEL	15,000	03/12/2009
20071724	H/AC	3,300	09/12/2007

SALES DATA

OFF RECORD Number	DATE	TYPE INST	Q U	V I	RSN CD	SALE PRICE
2710/1315	5/06/2024	WD	Q	I	01	875,000
GRANTOR: SPARKS LARRY W & JANE						
GRANTEE: STAKELY MICHAEL AND						
1236/0364	6/07/2004	WD	Q	I		482,000
GRANTOR: THOMPSON PAUL F & MAR						
GRANTEE: SPARKS LARRY W & JA						

BUILDING NOTES

BUILDING DIMENSIONS

UOP=[YR=1993] W14 DCK=[YR=2007] W22 S5 BAS=[YR=1993] W17 S10 W3 S25 E11 UOP=[YR=2007] S6 E9 FOP=[YR=2007] E10 FGR=[YR=1993] S16 E22 N22 W22 FOP=[YR=1993] N1 U3 L3 W7 S8 E10 N4$ S6$ N2 W10 S2$ N6 W9$ E9 N4 E7 R3 D3 S1 E26 N6 BAS=[YR=2007] E18 N22 W18 S22$ N24 W36 N5$ S5 E22 N10$ S10 E14 N10$ PTR=N40 FUS=[YR=1993] E22 UOP=[YR=1993] N10 E14 S10 W14$ E14 S30 W56 N20 E20 N10$ S40$.

EXTRA FEATURES

LN	OB/XF CODE	DESCRIPTION	BLD	CAP	L	W	UNITS	UT	Adj R	ADJ UNIT PRICE	ORIG COND	YEAR ON	YEAR ACTUAL	Q	% COND	OB/XF MKT VALUE	NOTES
2	0504	FP-ELECTRI	0	0	0	0	2.00	UT	2,000.00	2,000.00	100	1987	1987	3	58	2,320	
6	1242	WD DECK A	0	0	0	0	216.00	SF	10.00	10.00	100	2013	2013	3	50	1,080	

LAND DESCRIPTION

TOTAL OB/XF 3,400

LN	USE CODE	CLS	LAND USE DESCRIPTION	CAP	RD	LOC ZONE	FRONT	DEPTH	TOT LND UTS	UNIT TYPE	DT	DPTH FACT	% COND	TOT ADJ	UNIT PRICE	ADJ UNIT PRICE	LAND VALUE	OTHER ADJUSTMENTS AND NOTES	YEAR	DENSITY	DECL	FRZ	YR	CONSRV
1	000140	C	RES GOLF	0		R1-G	0.00	0.00	1.00	LT		1.00	1.00	1.00	400,000.00	400,000.00	400,000							

REVIEW DATE 01/01/2023 BY CD Total Acres: 0.00 Total Land Value: 400,000 Market: 0 Agricultural: 0 Common: 400,000 PRINTED 07/09/2026 BY SYS