LOT 59
SELVA VERDA SUB #3 PB 4/102

MARKS JOANNA F
3616 VIA DEL MAR RD
FERNANDINA BEACH, FL 32034

**2026**

**00-00-31-1687-0059-0000**

## NASSAU COUNTY PROPERTY



## BUILDING CHARACTERISTICS

| ELEMENT | CD | CONSTRUCTION |
|---|---|---|
| Exterior Wall | 05 | AVERAGE 100 |
| Roof Structur | 03 | GABLE/HIP 100 |
| Roof Cover | 03 | COMP SHNGL 100 |
| Interior Wall | 05 | DRYWALL 100 |
| Interior Floo | 14 | CARPET 70 |
| Interior Floo | 12 | HARDWOOD 30 |
| Air Condition | 03 | CENTRAL 100 |
| Heating Type | 04 | AIR DUCTED 100 |
| Bedrooms | | 3 100 |
| Bathrooms | | 2.5 100 |
| Frame | 02 | WOOD FRAME 100 |
| Stories | 2. | 2. 100 |
| Units | | 0 100 |
| Occupancy | 00 | NONE 100 |
| Quality | 03 | Quality Level 03 |

DOR CODE 0100 SINGLE FAMILY
MAP NUM | MKT AREA 01
NEIGHBORHOOD/LOC 1073.00

| AREA TYPE | TOTAL GROSS AREA | PCT OF BASE | YEAR | TOT ADJ AREA | SUBAREA MARKET VALUE |
|---|---|---|---|---|---|
| BAS | 1,623 | 100 | 1993 | 1,623 | 224,479 |
| BAS | 160 | 100 | 2022 | 160 | 22,130 |
| BAS | 162 | 100 | 2022 | 162 | 22,406 |
| FGR | 437 | 55 | 1993 | 240 | 33,195 |
| FGR | 421 | 55 | 2022 | 232 | 32,088 |
| FOP | 296 | 30 | 1993 | 89 | 12,310 |
| FSP | 280 | 40 | 2022 | 112 | 15,491 |
| FUS | 874 | 100 | 1993 | 874 | 120,884 |
| PTO | 24 | 5 | 2022 | 1 | 139 |
| PTO | 112 | 5 | 2022 | 6 | 830 |
| TOTALS | 4,410 | | | 3,501 | 484,229 |

## MARKET ADJUSTMENTS

| TYPE | MDL | EFF. AREA | TOT ADJ PTS | EFF. BASE RATE | REPL. COST NEW | AYB | EYB | ECON | FNCT | | NORM | % COND |
|---|---|---|---|---|---|---|---|---|---|---|---|---|
| 0500 | 01 | 3,501 | 94.9500 | 157.62 | 551,828 | 1993 | 2000 | 0 | 0 | 0 | 12.25 | 87.75 |

1 SFR CUST 100% - 2022 Heated Area: 2819 HX Base Yr 2022

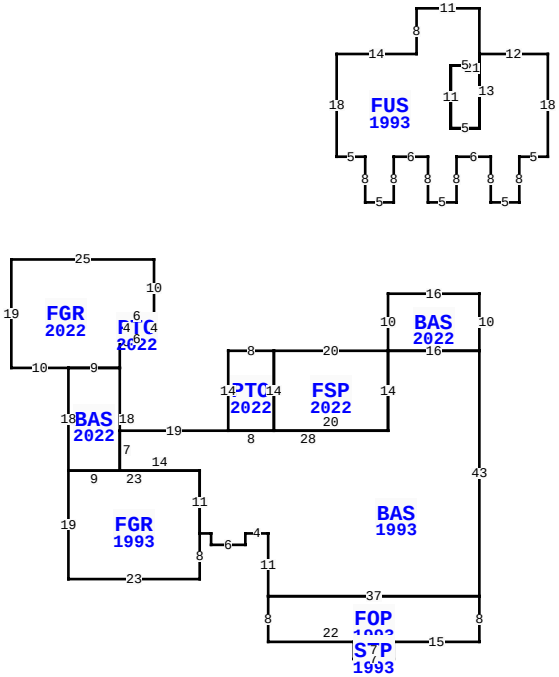


** This building has 11 Sub-Areas

3616 VIA DEL MAR, FERNANDINA BEACH

| | | | |
|---|---|---|---|
| BLD DATE | | LGL DATE | |
| XF DATE | | LAND DATE | 04/28/2026 MLU |
| INC DATE | | AG DATE | |

## VALUATION SUMMARY

| | | |
|---|---|---|
| VALUATION BY | | STANDARD |
| Tax Group: 2 | Tax Dist: | |
| BUILDING MARKET VALUE | | 484,229 |
| TOTAL MARKET OB/XF VALUE | | 2,450 |
| TOTAL LAND VALUE - MARKET | | 400,000 |
| TOTAL MARKET VALUE | | 886,679 |
| SOH/AGL Deduction | | 156,068 |
| ASSESSED VALUE | | 730,611 |
| TOTAL EXEMPTION VALUE | HX HB WX | 56,411 |
| BASE TAXABLE VALUE | | 674,200 |
| TOTAL JUST VALUE | | 886,679 |
| NCON VALUE | | 0 |
| INCOME VALUE | | |
| PREVIOUS YEAR MKT VALUE | | 822,295 |

| PERMIT NUM | DESCRIPTION | AMT | ISSUED |
|---|---|---|---|
| 20222089 | REMODEL | 0 | 04/13/2022 |
| 20141702 | BATHREM | 7,973 | 08/01/2014 |
| B020375 | REPAIR/RRF | 3,000 | 03/05/2002 |
| 7759 | NEW CONSTR | 84,000 | 06/17/1993 |

## SALES DATA

| OFF RECORD Number | DATE | TYPE INST | Q / U | V / I | RSN CD | SALE PRICE |
|---|---|---|---|---|---|---|
| 2435/1367 | 2/19/2021 | WD | Q | I | 01 | 597,000 |
| GRANTOR: JOHNSON MARY ALICE | | | | | | |
| GRANTEE: MARKS CHARLES F & J | | | | | | |
| 1962/0329 | 2/06/2015 | QC | U | I | 11 | 100 |
| GRANTOR: JOHNSON WILBUR & MARY | | | | | | |
| GRANTEE: JOHNSON MARY ALICE | | | | | | |

## BUILDING NOTES

## BUILDING DIMENSIONS

FUS=[YR=1993] W5 S11 E5 N21 W11 S8 W14 S18E5S8 E5 N8E6S8 E5N8E6 S8E5N8E5N18W12S 13W5N11E5$ PTR= S50 BAS=[YR=1993] S43 FOP=[YR=1993] S8 W15 STP=[YR=1993] S3 W7 N3 E7 $ W22 N8 E37 $ W37 N11 W4 S2 W6 N2 W2 FGR=[YR=1993] S8 W23 N19 BAS=[YR=2022] N18FGR=[YR=2022] W10N19E25 S10 PTO=[YR=2022] S4W6N4E6$ W6S9W9$ E9 S18 W9$ E23 S11$ N11 W14 N7 E19 PTO=[YR=2022] N14E8 FSP=[YR=2022] E20 BAS=[YR=2022] N10E16S10W16$ S14W20 N14$ S14 W8$ E28 N14 E16$ N50$ .

## EXTRA FEATURES

| LN | OB/XF CODE | DESCRIPTION | BLD | CAP | L | W | UNITS | UT | Adj R | ADJ UNIT PRICE | ORIG COND | YEAR ON | YEAR ACTUAL | Q | % COND | OB/XF MKT VALUE | NOTES |
|---|---|---|---|---|---|---|---|---|---|---|---|---|---|---|---|---|---|
| 4 | 0500 | FP-PRE FAB | 0 | 100 | 0 | 0 | 1.00 | UT | 3,500.00 | 3,500.00 | 100 | 1993 | 1993 | 3 | 70 | 2,450 | |

## LAND DESCRIPTION

TOTAL OB/XF 2,450

| LN | USE CODE | CLS | LAND USE DESCRIPTION | CAP | RD | LOC ZONE | FRONT | DEPTH | TOT LND UTS | UNIT TYPE | DT | DPTH FACT | % COND | TOT ADJ | UNIT PRICE | ADJ UNIT PRICE | LAND VALUE | OTHER ADJUSTMENTS AND NOTES | YEAR | DENSITY | DECL | FRZ | YR | CONSRV |
|---|---|---|---|---|---|---|---|---|---|---|---|---|---|---|---|---|---|---|---|---|---|---|---|---|
| 1 | 000140 | C | RES GOLF | 100 | | R1-G | 0.00 | 0.00 | 1.00 | LT | | 1.00 | 1.00 | 1.00 | 400,000.00 | 400,000.00 | 400,000 | | | | | | | |

REVIEW DATE 01/01/2023 BY CD Total Acres: 0.00 Total Land Value: 400,000 Market: 0 Agricultural: 0 Common: 400,000 PRINTED 07/09/2026 BY SYS