LOT 10
IN OR 1814/1704
SELVA VERDA SUB PB 4/49

BURNEY CHRISTOPHER W EST/KEELING JENNIFER L
2501 VIA DEL RAY
FERNANDINA BEACH, FL 32034

2026

00-00-31-1685-0010-0000

NASSAU COUNTY PROPERTY

BUILDING CHARACTERISTICS

ELEMENT	CD	CONSTRUCTION
Exterior Wall	12	CEDAR 100
Roof Structur	03	GABLE/HIP 100
Roof Cover	03	COMP SHNGL 100
Interior Wall	05	DRYWALL 100
Interior Floo	08	SHT VINYL 50
Interior Floo	14	CARPET 50
Air Condition	03	CENTRAL 100
Heating Type	04	AIR DUCTED 100
Bedrooms		4 100
Bathrooms		4 100
Frame	02	WOOD FRAME 100
Stories	2.	2. 100
Units		0 100
BUD8 Adjustme	02	DIST FB 100
Quality	03	Quality Level 03

DOR CODE	0100	SINGLE FAMILY	
MAP NUM		MKT AREA	01
NEIGHBORHOOD/LOC	1073.00		

AREA TYPE	TOTAL GROSS AREA	PCT OF BASE	YEAR	TOT ADJ AREA	SUBAREA MARKET VALUE
BAS	1,758	100	1993	1,758	188,094
DCK	130	10	2007	13	1,391
DCK	98	10	2019	10	1,070
DCK	472	10	2019	47	5,028
FGR	624	55	1993	343	36,699
FST	50	55	1993	28	2,996
FUS	864	100	1993	864	92,442
TOTALS	3,996			3,063	327,719

MARKET ADJUSTMENTS

TYPE	MDL	EFF. AREA	TOT ADJ PTS	EFF. BASE RATE	REPL. COST NEW	AYB	EYB	ECON	FNCT		NORM	% COND
0100	11	3,063	133.1976	139.86	428,391	1978	1978	0	0	0	23.50	76.50

1 SINGLE FAM 100% - 2016 Heated Area: 2622 HX Base Yr 2016

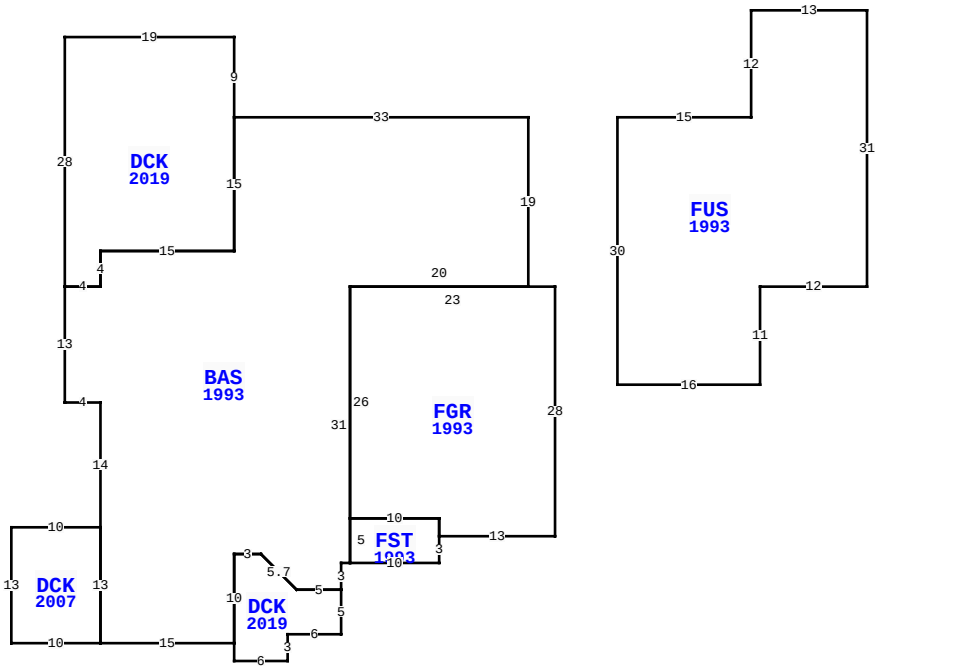

2501 VIA DEL REY, FERNANDINA BEACH

BLD DATE	04/09/2008	DJ	LGL DATE		
XF DATE	04/09/2008	DJ	LAND DATE	04/28/2026	MLU
INC DATE			AG DATE		

VALUATION SUMMARY

VALUATION BY		STANDARD
Tax Group: 2	Tax Dist:	
BUILDING MARKET VALUE		327,719
TOTAL MARKET OB/XF VALUE		1,470
TOTAL LAND VALUE - MARKET		400,000
TOTAL MARKET VALUE		729,189
SOH/AGL Deduction		351,671
ASSESSED VALUE		377,518
TOTAL EXEMPTION VALUE	HX HB	51,411
BASE TAXABLE VALUE		326,107
TOTAL JUST VALUE		729,189
NCON VALUE		0
INCOME VALUE		
PREVIOUS YEAR MKT VALUE		670,052

PERMIT NUM	DESCRIPTION	AMT	ISSUED
20190042	DECK	0	01/15/2019
20121573	REPIPE	2,237	08/03/2012

SALES DATA

OFF RECORD Number	DATE	TYPE INST	Q U	V I	RSN CD	SALE PRICE
1814/1704	9/05/2012	WD	Q	I	02	250,000
GRANTOR: ESTEVEZ FELIPE J AS B						
GRANTEE: BURNEY CHRISTOPHER						
0736/0586	8/11/1995	WD	Q	I		175,000
GRANTOR: QUESADA ANTHONY MICHA						
GRANTEE: DIOCESE OF ST AUGUS						

BUILDING NOTES

BUILDING DIMENSIONS

BAS=[YR=1993] W33 DCK=[YR=2019] N9 W19 S28 E4 N4 E15 N15$ S15 W15 S4 W4 S13 E4 S14 DCK=[YR=2007] W10 S13 E10 N13$ S13 E15 DCK=[YR=2019] S2 E6 N3 E6 N5 W5 U4 L4 W3 S10$ N10 E3 D4 R4 E5 N3 E1 FST=[YR=1993] E10 N3 FGR=[YR=1993] E13 N28 W23 S26 E10 S2$ N2 W10 S5$N31 E20 N19$ PTR=E10 FUS=[YR=1993] E15 N12 E13 S31 W12 S11 W16 N30$ W10$.

EXTRA FEATURES

L N	OB/XF CODE	DESCRIPTION	BLD	CAP	L	W	UNITS	UT	Adj R	ADJ UNIT PRICE	ORIG COND	YEAR ON	YEAR ACTUAL	Q	% COND	OB/XF MKT VALUE	NOTES
1	0500	FP-PRE FAB	0	100	0	0	1.00	UT	3,500.00	3,500.00	100	1980	1980	3	42	1,470	

LAND DESCRIPTION

TOTAL OB/XF 1,470

L N	USE CODE	CLS	LAND USE DESCRIPTION	CAP	R D	LOC ZONE	FRONT	DEPTH	TOT LND UTS	UNIT TYPE	D T	DPTH FACT	% COND	TOT ADJ	UNIT PRICE	ADJ UNIT PRICE	LAND VALUE	OTHER ADJUSTMENTS AND NOTES	YEAR	DENSITY	DECL	FRZ	YR	CONSRV
1	000140	C	RES GOLF	100		R1-G	0.00	0.00	1.00	LT		1.00	1.00	1.00	400,000.00	400,000.00	400,000							

REVIEW DATE 01/01/2023 BY CD Total Acres: 0.00 Total Land Value: 400,000 Market: 0 Agricultural: 0 Common: 400,000 PRINTED 07/09/2026 BY SYS