LOT 3
IN OR 1001/401
SEAVIEW SUB #2 PB 5/26

STABLER JERRY L & PHYLLIS J
3968 1ST AV
FERNANDINA BEACH, FL 32034

2026

00-00-31-1681-0003-0000

BUILDING CHARACTERISTICS

ELEMENT	CD	CONSTRUCTION
Exterior Wall	14	WD SHINGLE 70
Exterior Wall	12	CEDAR 30
Roof Structur	03	GABLE/HIP 100
Roof Cover	03	COMP SHNGL 100
Interior Wall	05	DRYWALL 100
Interior Floo	14	CARPET 80
Interior Floo	12	HARDWOOD 20
Air Condition	03	CENTRAL 100
Heating Type	04	AIR DUCTED 100
Bedrooms		3 100
Bathrooms		3 100
Frame	02	WOOD FRAME 100
Stories	3.	3. 100
Units		0 100
Occupancy	00	NONE 100
Quality	05	Quality Level 05
DOR CODE	0100	SINGLE FAMILY
MAP NUM		MKT AREA 01
NEIGHBORHOOD/LOC	1044.00	

AREA TYPE	TOTAL GROSS AREA	PCT OF BASE	YEAR	TOT ADJ AREA	SUBAREA MARKET VALUE
BAS	675	100	1998	675	69,242
FGR	462	55	1998	254	26,056
FSP	180	40	1998	72	7,385
FST	49	55	1998	27	2,770
FUS	766	100	1998	766	78,577
FUS	1,096	100	1998	1,096	112,428
PTO	253	5	1998	13	1,334
UOP	10	20	1998	2	205
UOP	32	20	1998	6	616
UOP	68	20	1998	14	1,436
TOTALS	4,113			3,047	312,563

MARKET ADJUSTMENTS

TYPE	MDL	EFF. AREA	TOT ADJ PTS	EFF. BASE RATE	REPL. COST NEW	AYB	EYB	ECON	FNCT		NORM	% COND
0100	01	3,047	112.9392	118.59	361,344	1998	1998	0	0	0	13.50	86.50

1 SINGLE FAM 100% - 2002 Heated Area: 2537 HX Base Yr 2002

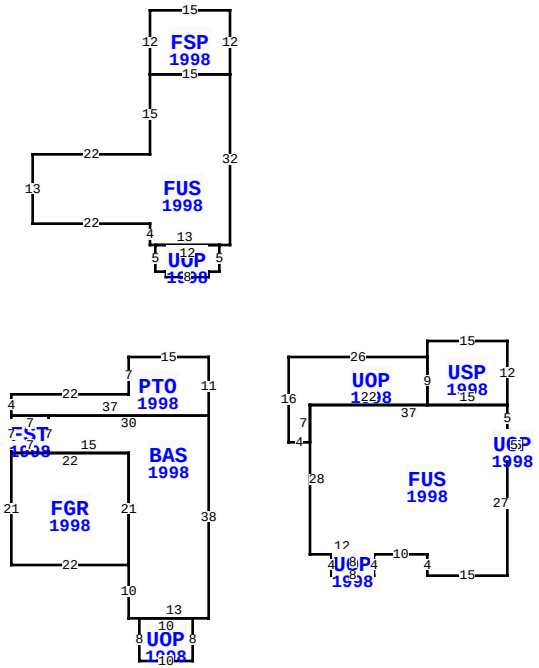

** This building has 13 Sub-Areas

3968 1ST AVE, FERNANDINA BEACH

BLD DATE		LGL DATE	
XF DATE		LAND DATE	05/08/2025 MLU
INC DATE		AG DATE	

NASSAU COUNTY PROPERTY

PAGE 1 of 1 2

VALUATION SUMMARY

VALUATION BY		STANDARD
Tax Group: 2	Tax Dist:	
BUILDING MARKET VALUE		312,563
TOTAL MARKET OB/XF VALUE		4,707
TOTAL LAND VALUE - MARKET		510,000
TOTAL MARKET VALUE		827,270
SOH/AGL Deduction		466,250
ASSESSED VALUE		361,020
TOTAL EXEMPTION VALUE	HX HB	51,411
BASE TAXABLE VALUE		309,609
TOTAL JUST VALUE		827,270
NCON VALUE		0
INCOME VALUE		
PREVIOUS YEAR MKT VALUE		819,595

PERMIT NUM	DESCRIPTION	AMT	ISSUED
20121141	ROOF	40,000	06/15/2012
B972341	NEW CONSTR	225,000	12/04/1997

SALES DATA

OFF RECORD Number	DATE	TYPE INST	Q U	V I	RSN CD	SALE PRICE
1001/0401	8/03/2001	WD	Q	I		398,000
GRANTOR: CHERRY CAROLYN A						
GRANTEE: STABLER JERRY L & P						
0729/0887	5/12/1995	WD	Q	V		36,000
GRANTOR: MCKENDREE KIM W & KIM						
GRANTEE: CHERRY CAROLYN A						

BUILDING NOTES

BUILDING DIMENSIONS

PTO=[YR=1998] W15 S7 W22 S4 FST=[YR=1998] S7 FGR=[YR=1998] S21 E22 BAS=[YR=1998] S10 E2 UOP=[YR=1998] S8 E10 N8 W10 $ E13 N38 W30 S7 E15 S21 $ N21 W22 $ E7 N7 W7 $ E37 N11 $ PTR= E15 UOP=[YR=1998] E26 USP=[YR=1998] N3 E15 S12 FUS=[YR=1998] S5 UOP=[YR=1998] E2 S5 W2 N5 $ S27 W15 N4 W10 UOP=[YR=1998] W8 S4 E8 N4 $ W12 N28 E37 $ W15 N9 $ S9 W22 S7 W4 N16 $ W15 $ PTR= N15 UOP=[YR=1998] N1 E2 N5 FUS=[YR=1998] E2 N32 FSP=[YR=1998] N12 W15 S12 E15 $ W15 S15 W22 S13 E22 S4 E13 $ W12 S5 E2 S1 E8 $ S15 $.

EXTRA FEATURES

LN	OB/XF CODE	DESCRIPTION	BLD	CAP	L	W	UNITS	UT	Adj R	ADJ UNIT PRICE	ORIG COND	YEAR ON	YEAR ACTUAL	Q	% COND	OB/XF MKT VALUE	NOTES
2	1242	WD DECK A	0	100	16	4	64.00	SF	10.00	10.00	100	1998	1998	3	20	128	
4	0500	FP-PRE FAB	0	100	0	0	1.00	UT	3,500.00	3,500.00	100	1998	1998	3	79	2,765	
5	1075	TRELLIS G	0	100	24	9	216.00	SF	35.00	35.00	100	1998	1998	3	24	1,814	

LAND DESCRIPTION

TOTAL OB/XF 4,707

LN	USE CODE	CLS	LAND USE DESCRIPTION	CAP	RD	LOC ZONE	FRONT	DEPTH	TOT LND UTS	UNIT TYPE	DT	DPTH FACT	% COND	TOT ADJ	UNIT PRICE	ADJ UNIT PRICE	LAND VALUE	OTHER ADJUSTMENTS AND NOTES	YEAR	DENSITY	DECL	FRZ	YR	CONSRV
1	000100	C	RES	100		R-1	85.00	100.00	85.00	FF		1.00	1.00	1.00	6,000.00	6,000.00	510,000							

REVIEW DATE 01/01/2023 BY CD Total Acres: 0.00 Total Land Value: 510,000 Market: 0 Agricultural: 0 Common: 510,000 PRINTED 07/09/2026 BY SYS