BLOCK 6 LOTS 11 12 13 &
E 35 FT OF LOTS 20 21 & 22
IN OR 630 PG 109

HARRISON JACK E
3800 S FLETCHER AVE
FERNANDINA BEACH, FL 32034

2026

00-00-31-1680-0006-0110

BUILDING CHARACTERISTICS

ELEMENT	CD	CONSTRUCTION
Exterior Wall	16	WD FR STUC 50
Exterior Wall	17	CB STUCCO 50
Roof Structur	03	GABLE/HIP 100
Roof Cover	03	COMP SHNGL 100
Interior Wall	03	PLASTER 100
Interior Floo	14	CARPET 90
Interior Floo	08	SHT VINYL 10
Air Condition	03	CENTRAL 100
Heating Type	04	AIR DUCTED 100
Bedrooms		3 100
Bathrooms		2 100
Frame	02	WOOD FRAME 100
Stories	2.	2. 100
Units		0 100
BUD8 Adjustme	02	DIST FB 100
Occupancy	00	NONE 100
Quality	04	Quality Level 04
DOR CODE	0100	SINGLE FAMILY
MAP NUM		MKT AREA 01
NEIGHBORHOOD/LOC	1053.00	

AREA TYPE	TOTAL GROSS AREA	PCT OF BASE	YEAR	TOT ADJ AREA	SUBAREA MARKET VALUE
BAS	104	100	1994	104	14,768
BAS	132	100	1994	132	18,743
BAS	147	100	1994	147	20,873
FOP	52	30	1993	16	2,272
FOP	56	30	1993	17	2,414
FOP	72	30	1993	22	3,124
FST	45	55	1994	25	3,550
FUS	1,647	100	1993	1,647	233,866
FUS	30	100	1994	30	4,260
UGR	1,116	45	1993	502	71,281
TOTALS	3,988			2,781	394,890

MARKET ADJUSTMENTS

TYPE	MDL	EFF. AREA	TOT ADJ PTS	EFF. BASE RATE	REPL. COST NEW	AYB	EYB	ECON	FNCT		NORM	% COND
0500	01	2,781	110.3760	183.22	509,535	1975	1980	0	0	0	22.50	77.50

1 SFR CUST 100% - 0 Heated Area: 2060 HX Base Yr 1992

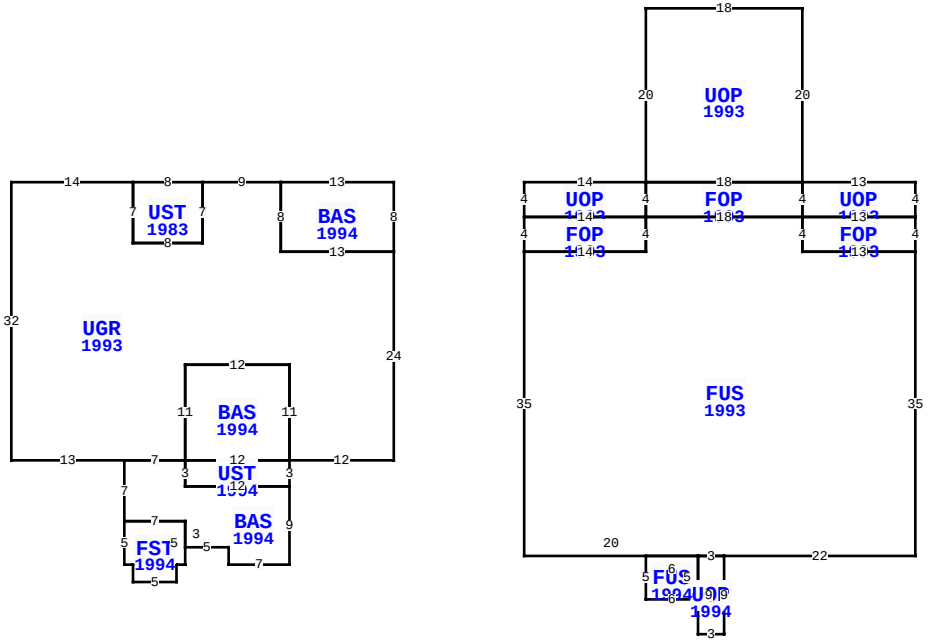

** This building has 16 Sub-Areas

3800 S FLETCHER AVE, FERNANDINA BEACH

BLD DATE		LGL DATE	
XF DATE		LAND DATE	04/24/2026 MLU
INC DATE		AG DATE	

NASSAU COUNTY PROPERTY

PAGE 1 of 1 2

VALUATION SUMMARY

VALUATION BY		STANDARD
Tax Group: 2	Tax Dist:	
BUILDING MARKET VALUE		394,890
TOTAL MARKET OB/XF VALUE		15,812
TOTAL LAND VALUE - MARKET		1,575,000
TOTAL MARKET VALUE		1,985,702
SOH/AGL Deduction		1,560,445
ASSESSED VALUE		425,257
TOTAL EXEMPTION VALUE	HX HB	51,411
BASE TAXABLE VALUE		373,846
TOTAL JUST VALUE		1,985,702
NCON VALUE		0
INCOME VALUE		
PREVIOUS YEAR MKT VALUE		2,080,184

PERMIT NUM	DESCRIPTION	AMT	ISSUED
20121550	NEW CONSTR	850	07/31/2012
20121353	ENC FRT ENT	35,000	07/10/2012
20121354	ROOF	1,500	07/10/2012
20080844	H/AC	4,500	05/19/2008
B020664	REPAIR/RRF	3,000	04/18/2002
B020664	REPAIR/RRF	3,000	04/18/2002

SALES DATA

OFF RECORD Number	DATE	TYPE INST	Q / U	V / I	RSN CD	SALE PRICE
0630/0109	6/28/1991	WD	Q	I		285,000
GRANTOR: MORRIS REAL EST CONS						
GRANTEE: HARRISON JACK & V H						
0488/0001	4/21/1986	WD	U	I		252,000
GRANTOR: BISHOP JAMES A & MARY						
GRANTEE: MORRIS REAL ESTATE						

BUILDING NOTES

BUILDING DIMENSIONS

BAS=[YR=1994] W13 UGR=[YR=1993] W9 UST=[YR=1983] W8 S7 E8 N7 $ S7 W8 N7 W14 S32 E13 BAS=[YR=1994] S7 FST=[YR=1994] S5 E1 S2 E5 N2 E1 N5 W7$ E7 S3 E5 S2 E7 N9 UST=[YR=1994] N3 BAS=[YR=1994] N11 W12 S11 E12 $ W12 S3 E12$ W12 N3 W7$E7 N11 E12 S11 E12 N24 W13 N8 $ S8 E13 N8 $ PTR= E15 UOP=[YR=1993] E14 UOP=[YR=1993] N20 E18 S20 UOP=[YR=1993] E13 S4 FOP=[YR=1993] S4 W13 N4 E13 $ W13 N4 $ FOP=[YR=1993] S4 W18 N4 E18 $ W18 $ S4 FUS=[YR=1993] E18 S4 E13 S35 W22 UOP=[YR=1994] S9 W3 N9 E3 $ W3 FUS=[YR=1994] W6 S5 E6 N5 $ W20 N35 FOP=[YR=1993] N4 E14 S4 W14 $ E14 N4$ W14 N4 $ W15 $.

EXTRA FEATURES

LN	OB/XF CODE	DESCRIPTION	BLD	CAP	L	W	UNITS	UT	Adj R	ADJ UNIT PRICE	ORIG COND	YEAR ON	YEAR ACTUAL	Q	% COND	OB/XF MKT VALUE	NOTES
1	0500	FP-PRE FAB	0	100	0	0	1.00	UT	3,500.00	3,500.00	100	1975	1975	3	32	1,120	
4	0416	DUNEWALKS	0	100	193	4	772.00	SF	30.00	30.00	100	1987	1987	3	20	4,632	
6	1242	WD DECK A	0	100	0	0	30.00	SF	10.00	10.00	100	1987	1987	3	20	60	
7	0410	ELEVATOR	0	100	0	0	1.00	UT	10,000.00	10,000.00	100	1994	1994	3	100	10,000	

LAND DESCRIPTION

TOTAL OB/XF 15,812

LN	USE CODE	CLS	LAND USE DESCRIPTION	CAP	RD	LOC ZONE	FRONT	DEPTH	TOT LND UTS	UNIT TYPE	DT	DPTH FACT	% COND	TOT ADJ	UNIT PRICE	ADJ UNIT PRICE	LAND VALUE	OTHER ADJUSTMENTS AND NOTES	YEAR	DENSITY	DECL	FRZ	YR	CONSRV
1	000120	C	RES OCEAN	100		R-1	75.00	400.00	75.00	FF		1.00	1.00	1.00	21,000.00	21,000.00	1,575,000							

REVIEW DATE 01/01/2023 BY CD Total Acres: 0.00 Total Land Value: 1,575,000 Market: 0 Agricultural: 0 Common: 1,575,000 PRINTED 07/09/2026 BY SYS