BLOCK C LOT 8
IN OR 1534/1320
PIRATES COVE 1 REPLAT PB 5/8

KOVALCIK JEROME & BETTY
2609 COUNTESS OF EGMONT ST
FERNANDINA BEACH, FL 32034

2026

00-00-31-1640-000C-0080

NASSAU COUNTY PROPERTY

BUILDING CHARACTERISTICS

ELEMENT	CD	CONSTRUCTION
Exterior Wall	10	ABOVE AVG 80
Exterior Wall	14	WD SHINGLE 20
Roof Structur	08	IRREGULAR 100
Roof Cover	03	COMP SHNGL 80
Roof Cover	11	SLATE 20
Interior Wall	05	DRYWALL 100
Interior Floo	12	HARDWOOD 70
Interior Floo	14	CARPET 30
Air Condition	03	CENTRAL 100
Heating Type	04	AIR DUCTED 100
Bedrooms		3 100
Bathrooms		2.5 100
Frame	02	WOOD FRAME 100
Stories	1.5	1.5 100
Units		0 100
Occupancy	00	NONE 100
Quality	03	Quality Level 03
DOR CODE	0100	SINGLE FAMILY
MAP NUM		MKT AREA 01
NEIGHBORHOOD/LOC	1083.00	

AREA TYPE	TOTAL GROSS AREA	PCT OF BASE	YEAR	TOT ADJ AREA	SUBAREA MARKET VALUE
BAS	1,659	100	2010	1,659	277,773
FGR	622	55	2010	342	57,263
FOP	304	30	2010	91	15,237
FSP	360	40	2010	144	24,110
FUS	696	100	2010	696	116,534
PTO	40	5	2010	2	334
STR	21	10	2010	2	334
STR	32	10	2010	3	503
UST	16	45	2010	7	1,172
TOTALS	3,750			2,946	493,260

MARKET ADJUSTMENTS

TYPE	MDL	EFF. AREA	TOT ADJ PTS	EFF. BASE RATE	REPL. COST NEW	AYB	EYB	ECON	FNCT		NORM	% COND
0500	01	2,946	108.5700	180.23	530,958	2010	2010	0	0	0	7.10	92.90

1 SFR CUST 100% - 2011 Heated Area: 2355 HX Base Yr 2011

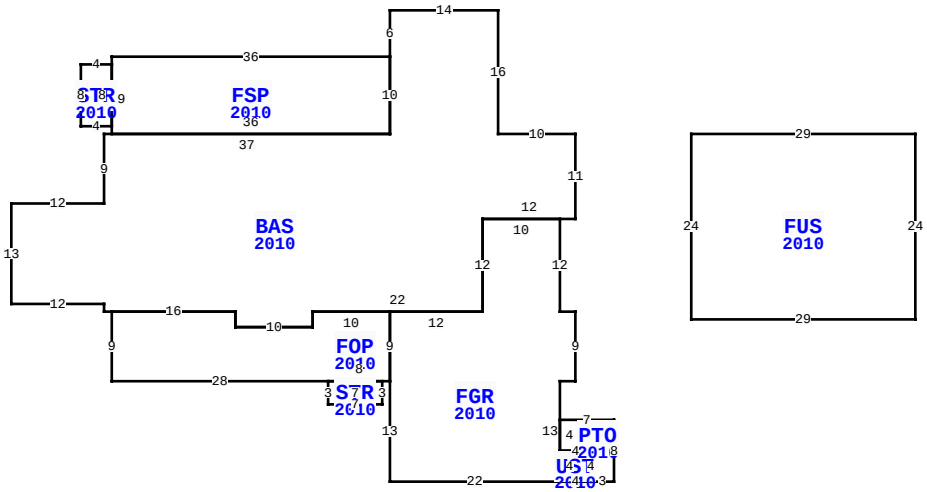

2609 COUNTESS OF EGMONT ST, FERNANDINA BEACH

BLD DATE	03/25/2015 KK	LGL DATE	
XF DATE		LAND DATE	04/07/2026 MLU
INC DATE		AG DATE	

VALUATION SUMMARY

VALUATION BY		STANDARD
Tax Group: 2	Tax Dist:	
BUILDING MARKET VALUE		493,260
TOTAL MARKET OB/XF VALUE		45,801
TOTAL LAND VALUE - MARKET		350,000
TOTAL MARKET VALUE		889,061
SOH/AGL Deduction		431,255
ASSESSED VALUE		457,806
TOTAL EXEMPTION VALUE	HX HB	51,411
BASE TAXABLE VALUE		406,395
TOTAL JUST VALUE		889,061
NCON VALUE		0
INCOME VALUE		
PREVIOUS YEAR MKT VALUE		989,426

PERMIT NUM	DESCRIPTION	AMT	ISSUED
20100999	XFOB	4,519	06/16/2010
20100960	GAS	1,000	06/09/2010
20100613	SWIM POOL	42,500	04/15/2010
20091339	NEW CONSTR	325,000	08/25/2009

SALES DATA

OFF RECORD Number	DATE	TYPE INST	Q U	V I	RSN CD	SALE PRICE
1534/1320	11/07/2007	WD	Q	V		252,000
GRANTOR: BIEBER JOHN & ROXANNE						
GRANTEE: KOVALCIK JEROME & B						
1145/0629	6/16/2003	WD	Q	V		85,000
GRANTOR: NASSAU BUILDING & SUP						
GRANTEE: BIEBER JOHN & ROXAN						

BUILDING NOTES

BUILDING DIMENSIONS

BAS=[YR=2010] W10N16W14S6 FSP=[YR=2010] W36S1 STR=[YR=2010] W4 S8 E4N8$ S9 E36 N10$ S10W37 S9W12S13E12S1 E1 FOP=[YR=2010] S9E28 STR=[YR=2010] S3E7 N3W7$ E8FGR=[YR=2010] S13 E22 UST=[YR=2010] E4 PTO=[YR=2010] E3N8W7S4E4 S4$ N4W4S4$ N13E2N9W2N12W10S12 W12S9$ N9W10S2W10N2W16$ E16S2 E10N2E22N12E12N11$ PTR=E15 FUS=[YR=2010] S24E29N24W29$ W15$.

EXTRA FEATURES

LN	OB/XF CODE	DESCRIPTION	BLD	CAP	L	W	UNITS	UT	Adj R	ADJ UNIT PRICE	ORIG COND	YEAR ON	YEAR ACTUAL	Q	% COND	OB/XF MKT VALUE	NOTES
1	0500	FP-PRE FAB	0	100	0	0	1.00	UT	3,500.00	3,500.00	100	2010	2010	3	92	3,220	
5	0860	POOL/SPA	0	100	0	0	1.00	UT	50,000.00	50,000.00	100	2010	2010	04	85	42,500	
10	1242	WD DECK A	0	100	7	3	21.00	SF	11.00	11.00	100	2010	2010	3	35	81	

LAND DESCRIPTION

TOTAL OB/XF 45,801

LN	USE CODE	CLS	LAND USE DESCRIPTION	CAP	RD	LOC ZONE	FRONT	DEPTH	TOT LND UTS	UNIT TYPE	DT	DPTH FACT	% COND	TOT ADJ	UNIT PRICE	ADJ UNIT PRICE	LAND VALUE	OTHER ADJUSTMENTS AND NOTES	YEAR	DENSITY	DECL	FRZ	YR	CONSRV
1	000100	C	RES	100	0006	R-1	0.00	0.00	1.00	LT		1.00	1.00	1.00	350,000.00	350,000.00	350,000							

REVIEW DATE 01/01/2023 BY CD Total Acres: 0.00 Total Land Value: 350,000 Market: 0 Agricultural: 0 Common: 350,000 PRINTED 07/09/2026 BY SYS